SYM	REVISIONS	APPROVED	DATE

D-09100-90370-1

CONTROL LOGIC

IF ISC4+NRUN OCCUR, J60, J61, J62 J63, SEND CONTROL TO "T" FROM "A"

000 000 A ISQL, IRCY IHIPS ISC4 IC65

YRUN

QUALIFIER MET (IQAM)
INHIBIT IF QUAL NOT MET (IIQN)
INHIBIT IF QUAL MET (IIQM)

100, X X X
F62 SET BY INSTRUCTION LOGIC
F61 SET FROM ROM (S/A
F60 SET FROM ROM (S/A

TO CALL SPECIAL PROGRAMS, SELECT IIQM, IIQN AND GUARANTEE THAT A QUALIFIER WILL BE MET (IQS7, IQC5).

EXECUTE ALL INSTRUCTIONS IN SPECIAL PROGRAM CALL, DONT SELECT ADDRESS LINES AS TYPE OF PROGRAM IS ENCODED IN QUALIFIER LINES, IQS3, IQS2, IQS1.

SELECT QUALIFIER LINES TO DEFINE TYPE OF SPECIAL PROGRAM. NOTE THAT BY SETTING THE 3 LSB OF "A" OR "Y" AND "S" AS COMPLEMENTS OF EACH OTHER NO GATING IS REQUIRED TO DIFFERENTIATE BETWEEN QUALIFIERS AND SPECIAL PROGRAM IDENTIFIERS, i.e, K's OCCURING OUT OF "A" OR "Y" HAVE NO EFFECT UNTIL EXECUTED IN "S".

101 111 T ISC3 — YSST (1 / 0)

001 111 U ISC3 — YSST (0 / 1)

001 011 V IC65

101 011 W ISRS IC60 IC61 — YSSR (1: SINGLE STEP READ; 0) — YSSS (1: SINGLE STEP STORE; 0)

101 000 Y ISQL, IRCY IHIPS, IC63 — PERFORMS SAME FUNCTION AS "A" EXCEPT IT DOES NOT TEST FOR CONDITIONAL HALT.

100 100 D' ISAL, ISIL, ISPL, IRCY IC62, IC65

100 001 B' ISDL, ISIL, ISPL, IRCY IC60, IC65

100 000 B ISDL, ISIL ISPL IRCY IC65

100 010 C ISDL, ISPL IRCY IC61 IC65

100 110 D ISAL, ISIL ISPL, IRCY IC61, IC62, IC65

100 101 E ISAL, ISPL IRCY, IC60 IC62,

100 011 F IC65

000 011 F' ISDL, ISIL ISPL, ISQL IRCY IC61

000 001 F2 IC60

100 111 G ISIL, IRCY, IC65

001 110 N IRDM, ISAN, IC61, IC62, IC64

011 110 P IRDM, IC61, IC62, IC63

010 000 R IWTM, IC60 IC61 IC62 IC64

NOTE:
(49) IQS1 RESETS F60
(51) IQS2 RESETS F61
(53) IQS3 RESETS F62
(55) IQS4 RESETS F02
(57) IQS5 RESETS F03
(59) IQS6 RESETS F04

000 111 S ISAL, ISPL, ISQL, IRCY IC63, IC64, IC65

COMPLEMENT SIGN

111 010 S1 IC60, IC61 IC64 — DUMMY STATE TO GIVE 4 CLOCK TIMES BETWEEN EDMS OF N & S2

101 001 S2 IRDM, ISC4 IC61, IC62 IC63, IC64 — ISC4 DIODE CONN. TO IC5F. RDM 1ST PART OF A STORE

110 111 S3 IWTM IC60 IC61, IC62 IC64 IC65 — STORE RESULTS BACK INTO CORE

DISPLAY DECODE

111 000 D1 ITBA, IC61, IC62 IC63 IC65 — SET CHARACTER INTO ROM ADDR.

010 110 D3 IC65 — START UP STATE

110 110 D2 ISAL, ISCL IRCY, IHIPS IC62, IC63, IC64 — RCB READ CHARACTER CODE INTO BFF

101 010 D4 ITMS, IC60 IC61, IC63 IC64

NOTE: START UP CIRCUIT FORCES CONTROL LOGIC TO D3.

TRANSFER VECTOR

111 001 T1 ITBA IC63 — PFF=00122 VIA QS6, QS5, QS4 IN STATE S — READ TRANSFER VECTOR INTO PFF, SFF

FAST ADD

FAST ADD ENTRY CONDITIONS
SFF=17$_8$
AUGEND → BFF,
WFF SET TO ADDRESS ADDEND.
ITBS PUTS ADDEND IN SFF. ITSB SETS BFF=17$_8$ FOR READ IN A2

111 011 A1 ITBS ITSB IC63

110 011 A2 IRDM, ISAN IC63, IC65 — ISAN GIVES K51 & SOURCE FOR J62 IF FS1=0, F65=1.

CARRY? — 0: FS1 — 1: 011 011 A6 IIBF IC62

AS COUNTS SFF FROM AUGEND VALUE TO ZERO

011 111 A5 ISCL, IRCY IHIB IC63 (RIA)

C06 — 1: 010 011 A4 ITMS, IWTM IC61, IC65 — 0: 010 111 A3 IIBF IC63 — INCREMENT ADDEND

CORDIC STEP INITIALIZE

PFF=12222.
FS2=0, F41=1
F40=1

111 111 N1 ISCI IC60 IC62, IC65

ISC4 GIVES J25

011 010 N8 ISC4, IRDM, ISAN, IC60 IC61 IC62 IC65 — READ DIRECTOR

INTIALIZE F03, F02

110 101 N9 ITSB, IC62 IC63, IC64 IC65

001 001 N10 IWTM IC6#

ISCI: IRDR TO SET BFF TO ALL 1'S J34, F23→F03, F22→F02 COMPLIMENTS FS2 SETS F41=1.

011 001 N11 ISCI, IC60 IC61, IC63 IC65

READ PROG. COUNTER

000 010 N2 IRDM, ISAN IC62, IC63 IC65

SET UP 6 LSB OF NEXT CORDIC STEP

101 110 N3 ITBA, IDBF IC60, IC61, IC62, IC63, IC64, IC65

010 001 N4 IWTM IC60 IC62

READ NEXT CORDIC STEP FROM CONSTANT LINES. INTO BFF

010 100 N5 ISCL IHIPS IRCY, IC64 RCB

END OF CORDIC SEQUENCE — C06 — 1: BFF = TRANSFER

001 100 N7 ITBA, IC60 IC62, IC63 IC64 IC65

0: 000 100 N6 ITMS, IC60 IC62, IC64 IC65 — 07-00 — RETURN TO MAIN PROGRAM

CORDIC STEP CONTINUE

111, 101 N12 ISCI, IC60 IC61 IC63 IC64, IC65

000 110 N13 IRDM, ISAN IC60, IC61 IC62, IC63

IRDR GIVES J63, K65
K60
TURN SENSE AMPL. ON

001 000 K IRDM, ISAN IC63, IC64 IC65 — READ

011 000 L IRDM IC63, IC65 — STORE ISTO GIVES K60, J63, J64, K65

110 000 M IWTM IC64 IC65 — IWTM GIVES K34, K44

CORDIC CONSTANT

BFF = INDIRECT ADDRESS OF CONSTANT
CFF = LSD TO RECEIVE INFO

111 110 C0 ITBA, IC60 IC61, IC65

READ INDIRECT ADDRESS

011 101 C1 ISCL, IRCY IHIB, IC63 RIA

010 101 C9 IC60 IC63

READ CONSTAUT FROM ROM

011 100 C8 ISCL IRCY IHIPS, IC65 RCB

CLEAR RECEIVING STATION

111 100 C2 IRDM, IC61 IC62, IC63 IC65

STORE CONSTANT

010 010 C3 IWTM, IC61 IC62, IC65

110 100 C10 ISC2 IC63

YDNE — 0: E25 • E24 — 1:

101 101 C7 ITMS, IC62 IC63, IC64

07 01

001 010 C6 ITBS, IC61 IC62, IC64

110 010 C5 IDBF IC63 IC64 IC65

101 100 C4 ITSA, IC61 IC62, IC63 IC64

DECREMENT SFF BY ONE COUNT

110 001 Z ISCL, IRCY, IHIB, ISC3, IC60, IC64, IC65 — RTV

ISCL SUMMARY CHART

S/A NO	83	25	27	31	29	21	23
CONSTANT LINE	IC06	IC05	IC04	IC03	IC02	IC01	IC00
MODE							
RIA (INDIRECT ADDR.)	F02	F01	F00	F13	F12	F11	F10
RTV (TRANSFER VECT)	F02	F01	F00	F13	F12	F04	F03
RCB (CONSTANT→BFF		F25	F24	F23	F22	F21	F20

ENTRIES SHOW WHICH FLIP-FLOPS ARE COMPLIMENTED WHEN IN RIA, RTV, RCB MODES.

RIA, RTV OCCUR IN E65 OF F65 RESPECTIVELY.
RIA & RTV SEPARATED FROM RCB BY IHIB & IHIPS.

ITEM	QTY	DESCRIPTION	PART NO.	DWG. NO.	MAT'L SPEC.

ENG. RESP. — DIV.

UNLESS OTHERWISE NOTED — TOLERANCES —
.XX ±0.02 .XXX ±0.005
ANGULAR ±
MACHINED SURFACES 63
— DO NOT SCALE —

DRAWN: JOHN SCOHY — DATE: 8-26-69
ENGINEER
APPROVED
SUPERSEDES

TITLE: FLOW CHART— CONTROL LOGIC

FINISH — SCALE

HEWLETT PACKARD
LABORATORY INSTRUMENTS

NEXT ASSY. 9100B

D-09100-90370-1

SYM	REVISIONS	APPROVED	DATE

FIXED POINT ALGORITHIM

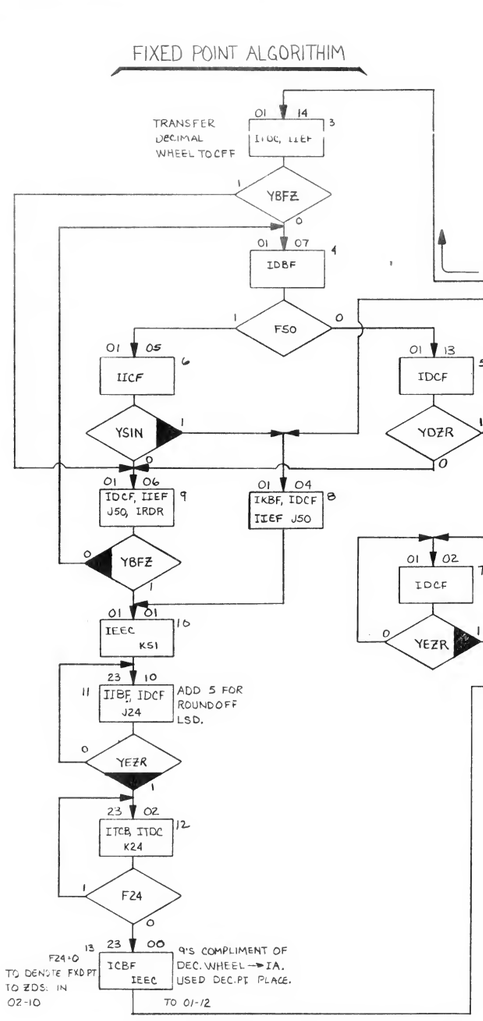

CHARACTER	BFF AT 00-07 RIGHT HALF (F50=0)								LEFT HALF (F50=1)							
					D5	D4	D3	D2					D1	D0	G1	G0
0	0	0	0	0	0	1	0	0	0	0	0	1	0	0	0	0
1	0	0	0	1	1	1	0	0	0	0	0	1	1	1	1	1
2	0	0	1	0	0	1	1	0	0	0	0	1	0	0	1	0
3	0	0	1	1	0	1	0	0	0	0	0	1	0	1	1	0
4	0	1	0	0	0	1	0	0	0	0	0	1	1	0	0	1
5	0	1	0	1	0	1	0	0	1	0	0	1	0	1	0	0
6	0	1	1	0	0	1	0	0	1	0	0	1	0	0	0	0
7	0	1	1	1	0	1	0	0	0	0	0	1	1	1	1	0
8	1	0	0	0	0	1	0	0	0	0	0	0	0	0	0	0
9	1	0	0	1	0	1	0	0	0	0	0	0	1	0	0	0
−	1	0	1	0	0	1	1	0	1	0	0	0	1	1	0	1
a	1	0	1	1	0	1	0	0	0	0	0	0	0	1	1	1
b	1	1	0	0	0	1	0	0	1	0	0	0	0	1	1	1
*	1	1	0	1	1	1	1	1	1	1	1	1	0	0	1	1
c	1	1	1	0	0	1	1	0	1	0	1	0	0	0	1	1
d	1	1	1	1	0	1	0	0	0	0	0	0	0	0	1	1
BLANK/+	1	1	1	1	0	1	1	0	1	0	1	0	0	0	0	0
					D5	D4	D3	D2					D1	D0	G1	G0

BLANK/+ HAVE F25=1, REST HAVE F25=0

F25=1 TO SHIFT FIGURE 1 TO LEFT

DISPLAY DECODE (BFF AT 03-00)

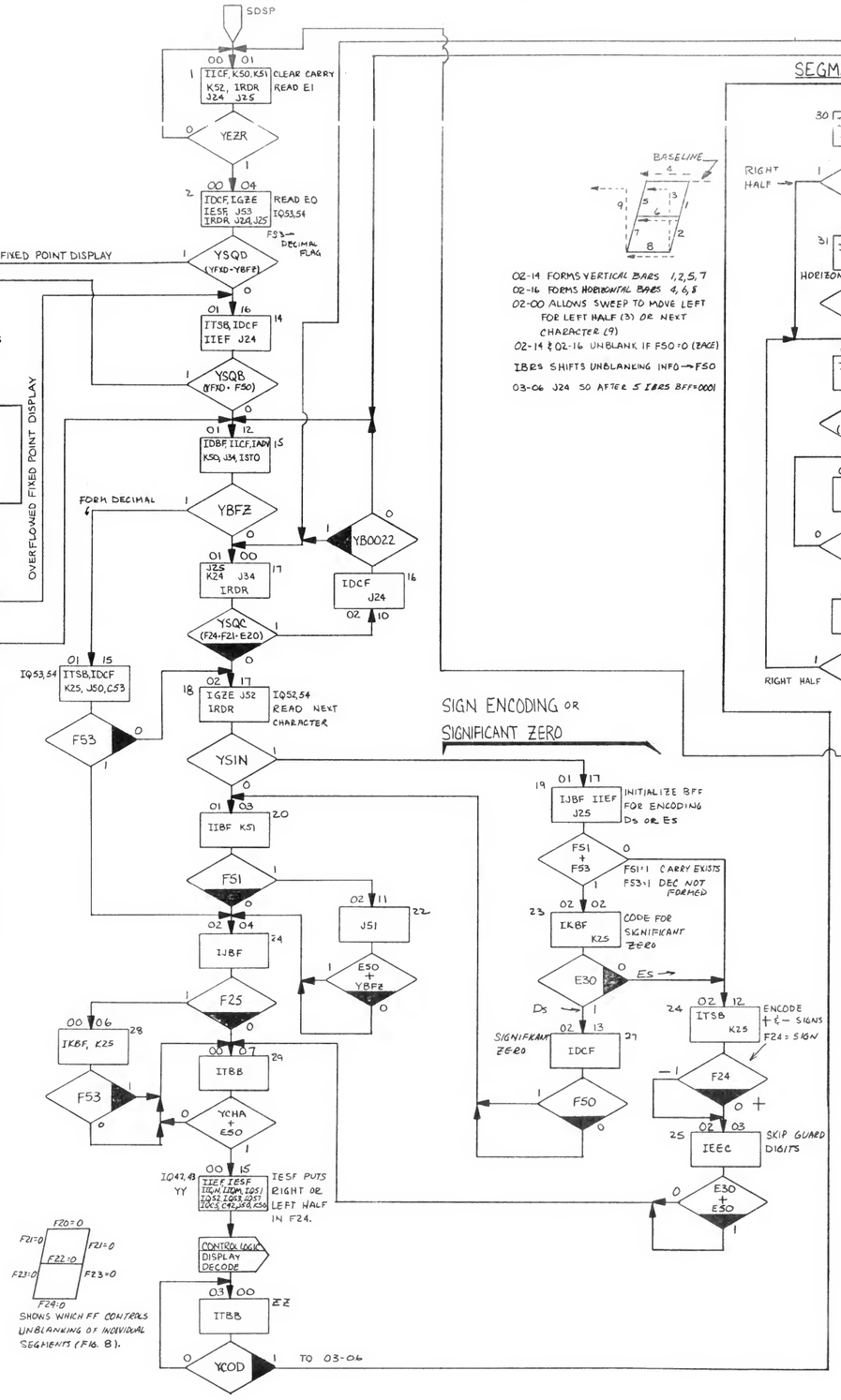

SIGN ENCODING OR SIGNIFICANT ZERO

SEGMENT GENERATORS

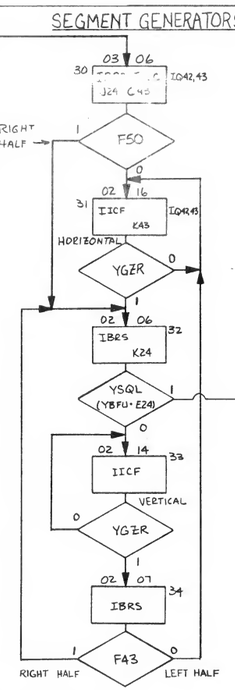

02-14 FORMS VERTICAL BARS 1,2,5,7
02-16 FORMS HORIZONTAL BARS 4,6,8
02-00 ALLOWS SWEEP TO MOVE LEFT FOR LEFT HALF (3) OR NEXT CHARACTER (9)
02-14 & 02-16 UNBLANK IF FS0=0 (BACE)

IBRS SHIFTS UNBLANKING INFO → FS0

03-06 J24 SO AFTER 5 IBRS BFF=0001

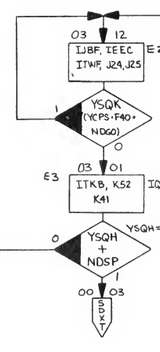

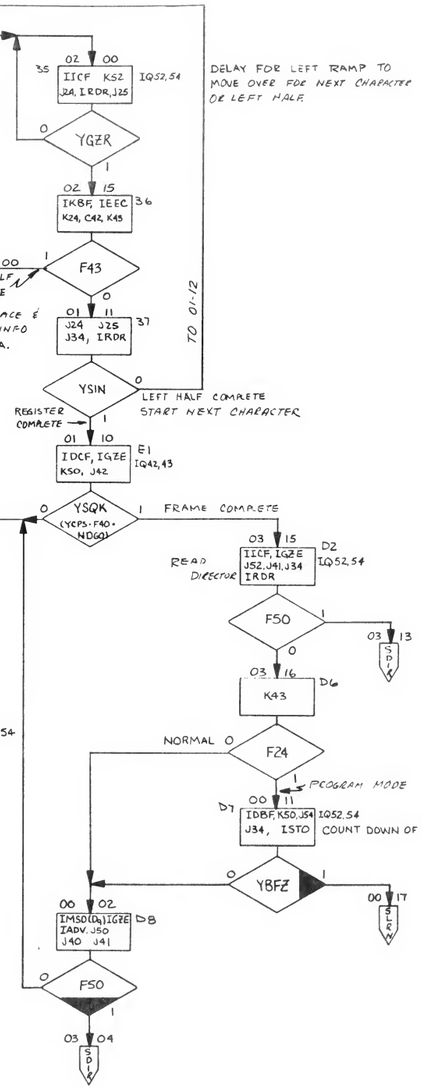

Ds	D9	D8	D7	D6	Ds	D4	D3	D2	D1	D0	G1	G0	Es	E1	E0
11₈			7₈		5₈		3₈	1₈		17₈		15₈		13₈	
12₈		10₈		6₈		4₈		2₈	0₈		16₈		14₈		

ENG. RESP. — DIV.						
UNLESS OTHERWISE NOTED — TOLERANCES — 0.XX ±0.02 0.XXX ±0.005 ANGULAR ± — MACHINED SURFACES 63 — DO NOT SCALE —	ITEM	QTY	DESCRIPTION	PART NO.	DWG. NO.	MAT'L SPEC.
	DRAWN JOHN SCOHY	DATE 8-26-69	TITLE FLOW CHART DISPLAY ROUTINE		HEWLETT-PACKARD LABORATORY INSTRUMENTS	
	ENGINEER				NEXT ASSY. 9100B	
	APPROVED				D-09100-90370-2	
	SUPERSEDES		FINISH	SCALE		

D-09100-90370-3			
SYM	REVISIONS	APPROVED	DATE
	REDRAWN — NO CHANGE		

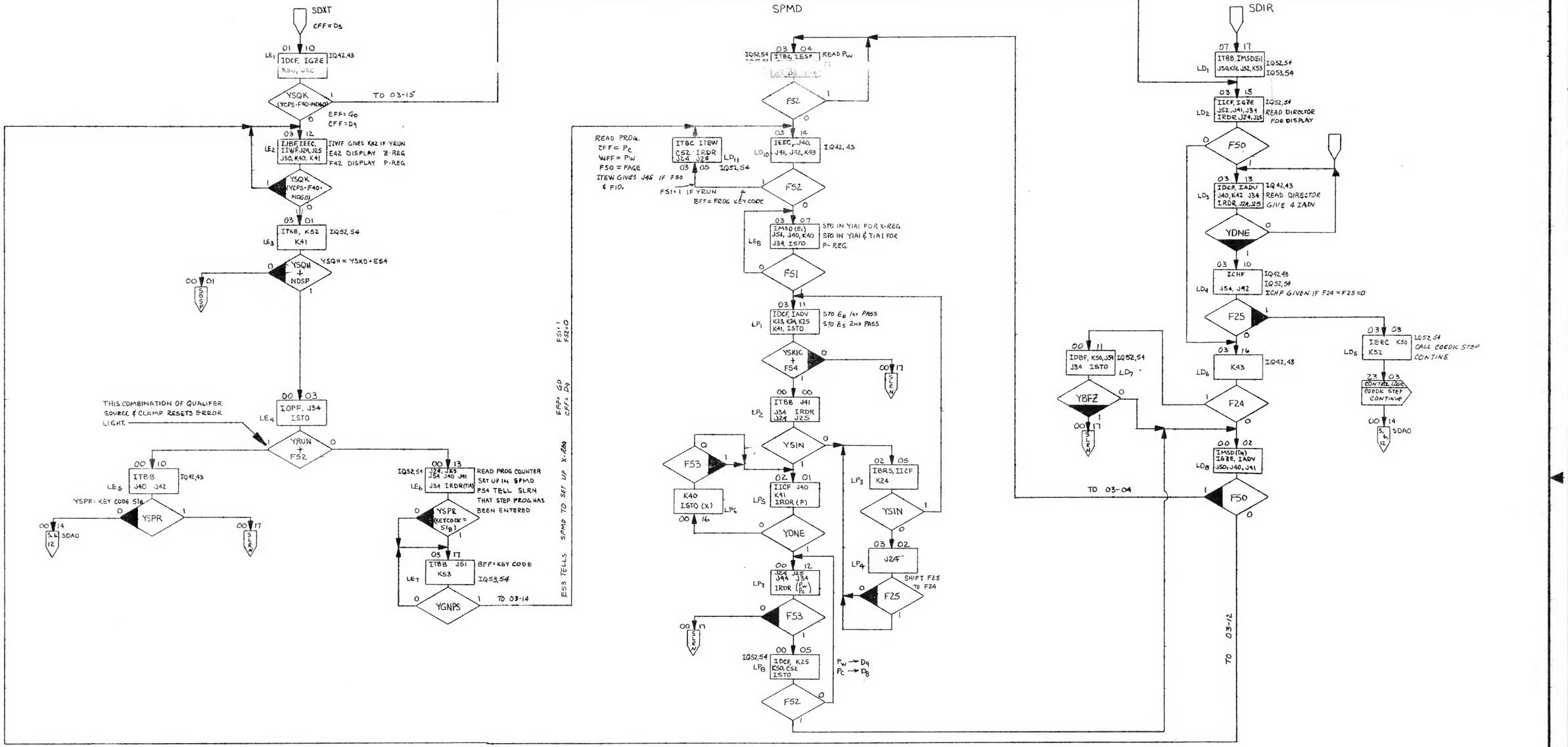

ENG. RESP. — DIV.							
UNLESS OTHERWISE NOTED — TOLERANCES — 0.XX ±0.02 0.XXX ±0.005 ANGULAR ± MACHINED SURFACES 63 — DO NOT SCALE —	ITEM	QTY	DESCRIPTION	PART NO.	DWG. NO.	MAT'L SPEC.	
	DRAWN JOHN SCOHY	DATE 8·27·69	TITLE SUBROUTINE - DISPLAY EXIT SUBROUTINE - DIRECTOR SUBROUTINE - PROG. MODE DISP.		HEWLETT PACKARD LABORATORY INSTRUMENTS		
	ENGINEER				NEXT ASSY. 91008		
	APPROVED				D-09100-90370-3		
	SUPERSEDES		FINISH	SCALE			

SYM	REVISIONS	APPROVED	DATE

DIR. = F34 F52 F40 F41 E44
SQ 1. = F34 F52 E40 E41 E44

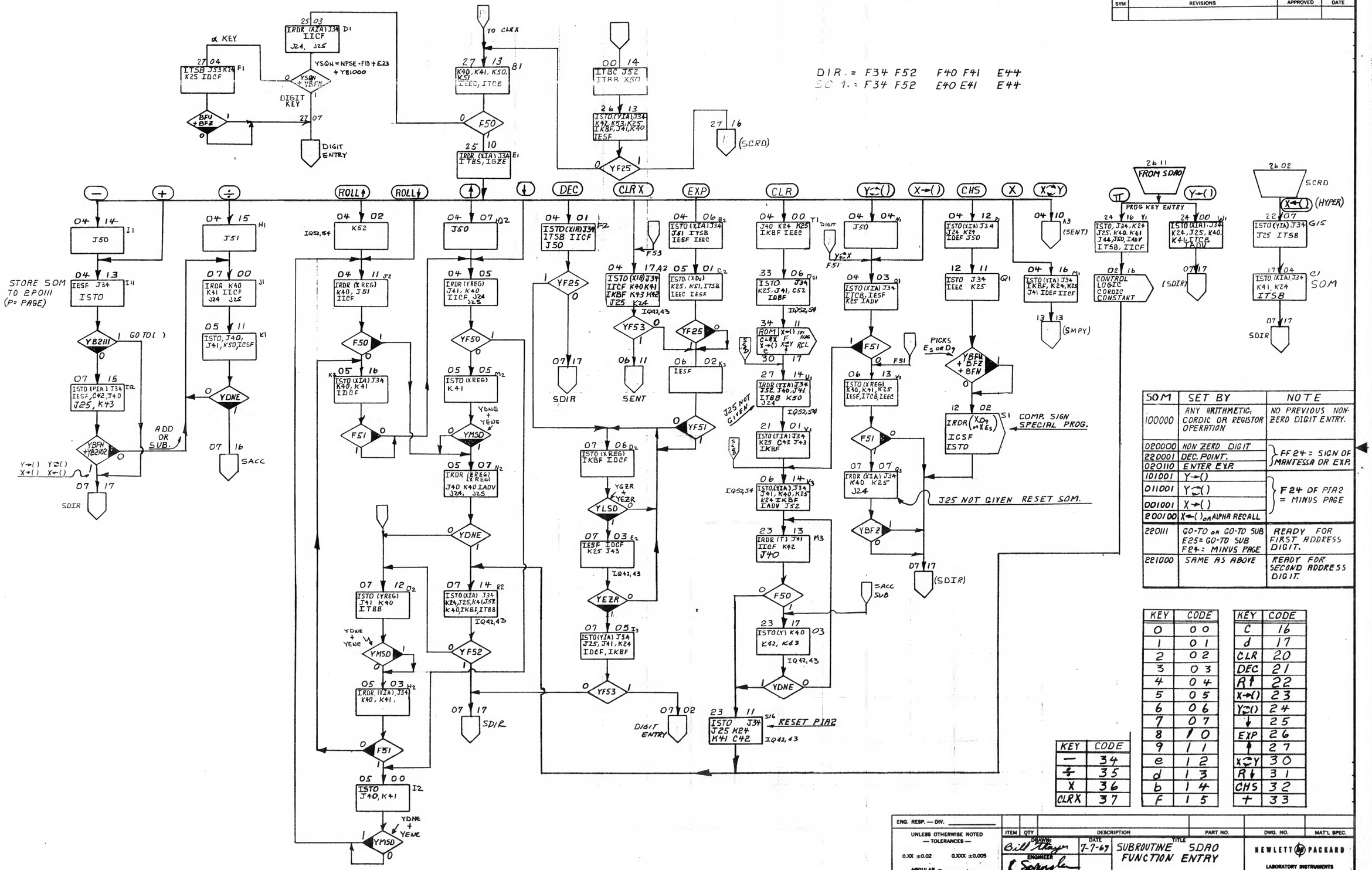

SOM	SET BY	NOTE
100000	ANY ARITHMETIC, CORDIC OR REGISTOR OPERATION	NO PREVIOUS NON-ZERO DIGIT ENTRY.
020000	NON ZERO DIGIT	FF24 = SIGN OF MANTESSA OR EXP.
220001	DEC. POINT.	
020110	ENTER EXP.	
101001	Y→()	F24 OF PIA2 = MINUS PAGE
011001	Y⇄()	
001001	X→()	
200100	X←() OR ALPHA RECALL	
220111	GO-TO OR GO-TO SUB E25 = GO-TO SUB F24 = MINUS PAGE	READY FOR FIRST ADDRESS DIGIT.
221000	SAME AS ABOVE	READY FOR SECOND ADDRESS DIGIT.

KEY	CODE
0	00
1	01
2	02
3	03
4	04
5	05
6	06
7	07
8	10
9	11
e	12
d	13
b	14
F	15

KEY	CODE
C	16
d	17
CLR	20
DEC	21
R↑	22
X→()	23
Y⇄()	24
↓	25
EXP	26
↑	27
X⇄Y	30
R↓	31
CHS	32
+	33

KEY	CODE
−	34
÷	35
X	36
CLRX	37

ENG. RESP. — DIV.

UNLESS OTHERWISE NOTED — TOLERANCES —
0.XX ±0.02 0.XXX ±0.005
ANGULAR ±
MACHINED SURFACES 63
— DO NOT SCALE —

ITEM	QTY	DESCRIPTION	PART NO.	DWG. NO.	MAT'L SPEC.

DRAWN Bill Mayer DATE 7-7-69
ENGINEER
APPROVED
SUPERSEDES

TITLE SUBROUTINE SDAO FUNCTION ENTRY
9100B
FINISH SCALE

NEWLETT PACKARD
LABORATORY INSTRUMENTS
NEXT ASSY. 9100B
D-09100-90370-4

SYM	REVISIONS	APPROVED	DATE

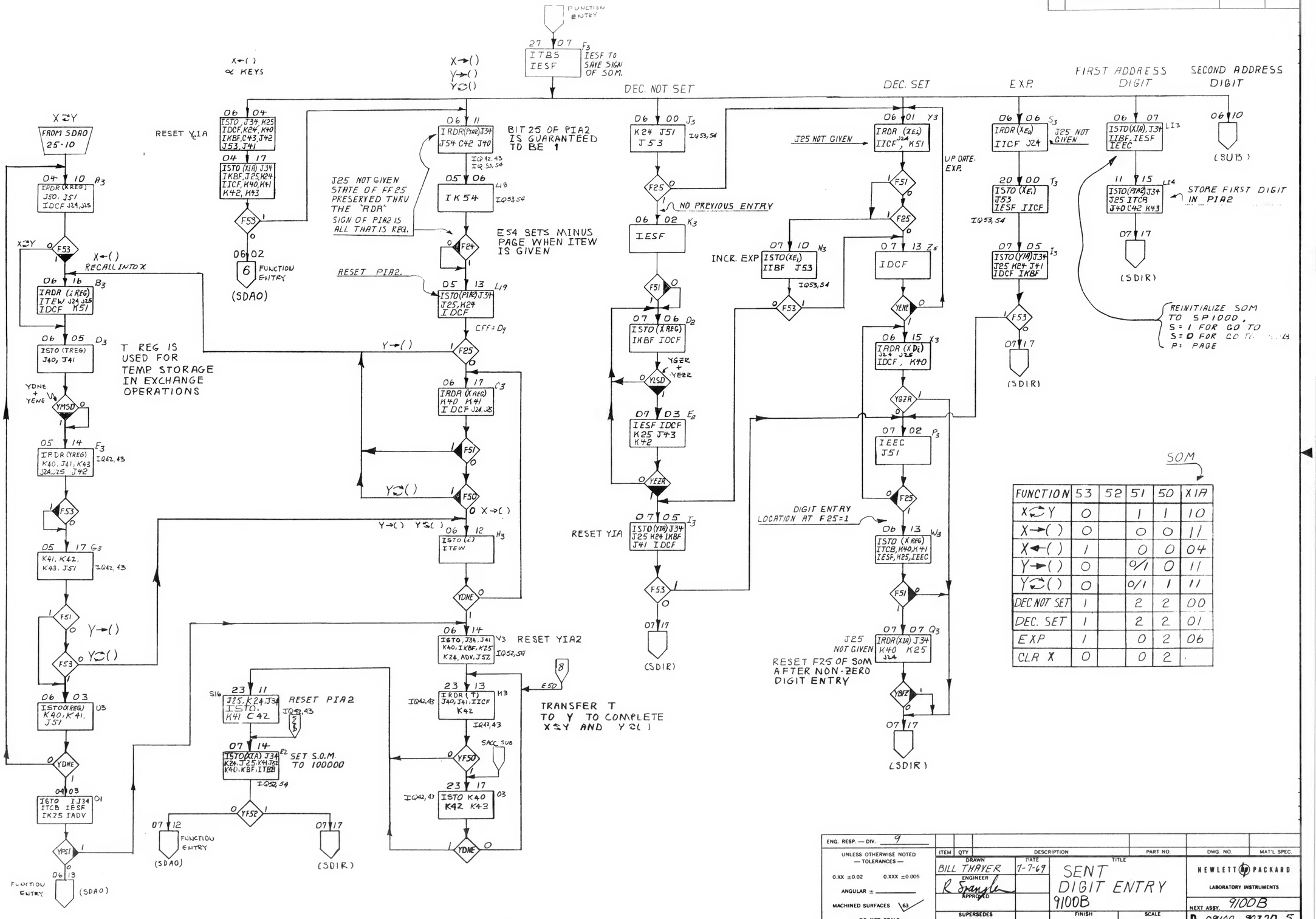

SOM

FUNCTION	53	52	51	50	XIA
X⇄Y	0		1	1	10
X→( )	0		0	0	11
X←( )	1		0	0	04
Y→( )	0		0/1	0	11
Y⇄( )	0		0/1	1	11
DEC NOT SET	1		2	2	00
DEC. SET	1		2	2	01
EXP	1		0	2	06
CLR X	0		0	2	.

ENG. RESP. — DIV. 9	ITEM	QTY	DESCRIPTION	PART NO.	DWG. NO.	MAT'L SPEC.
UNLESS OTHERWISE NOTED — TOLERANCES — 0.XX ±0.02 0.XXX ±0.005 ANGULAR ± MACHINED SURFACES 63 — DO NOT SCALE —	DRAWN BILL THAYER	DATE 7-7-69	TITLE SENT DIGIT ENTRY 9100B		HEWLETT PACKARD LABORATORY INSTRUMENTS	
	ENGINEER R Spangle				NEXT ASSY. 9100B	
	APPROVED				D-09100-90370-5	
	SUPERSEDES		FINISH	SCALE		

SYM	REVISIONS	APPROVED	DATE

DIRECTOR = F34, F52, F40, F41 E44
S.O.M. = F34, F52, E40, E41 E44
FLAG = F34 F52 F40 F41 F44
TRIG = F40 E41 F42

KEY CODE FROM R.O.M. ONLY

GO TO( ) | LN10 | PAUSE | STOP | END | PRINT | FORMAT | X=Y | X>Y | X<Y | IF FLAG | SET FLAG | CONTINUE | Y↑( ) | |Y| | TT

READ PW

STORE S.O.M. TO IPOIII WHERE P = CURRENT PAGE

SLRN | S DIR | SDIR | FUNCTION ENTRY

CONTROL LOGIC CORDIC CONSTANT

E23 + YB1000 + NRSE · F13

BIT 24 OF KEY CODE

CLEAR ARITH. CARRY

RDR AND STO USED FOR DELAY

FS1=1 — HOUT
FS1=0 — HPMT

CLEAR. DIR.

SET F25 IN DIR. FOR USE IN SLRN.

PROG. MODE

STORE TRANSFER VECTOR

CLEAR FLAG IF ENTERED FROM R.O.M.

F25 = 1 IF FLAG IS SET

J24 NOT GIVEN

READ SIGN OF Y D_9

FROM S LRN WITH FMT CODE.

QUAL MET | QUAL NOT MET | FMT

F50 F51 IF FLAG WAS SET:

ENG. RESP. — DIV.	ITEM	QTY	DESCRIPTION	PART NO.	DWG. NO.	MAT'L SPEC.
UNLESS OTHERWISE NOTED — TOLERANCES — 0.XX ±0.02 0.XXX ±0.005 ANGULAR ± MACHINED SURFACES 63 — DO NOT SCALE —	DRAWN Bill Hayes	DATE 7-7-69	TITLE SUBROUTINE SDAO PROGRAM MODE KEY PORTION.		HEWLETT PACKARD LABORATORY INSTRUMENTS	
	ENGINEER APPROVED R Spurgeon				NEXT ASSY. 9100B	
	SUPERSEDES		FINISH	SCALE 9100B	D-09100-90370-6	

SYM	REVISIONS	APPROVED	DATE

STORING AND RETURNING OF THE SUBROUTINE RETURN PROG. STEP IN THE "P" REGISTOR.

P REG = E44, E43, F42, E41, F40.

P_W STORED IN +5IA1 (F34 E52 F44, E43, F42, E41, F40)

P_C STORED IN +5IA2 (F34 F52 " " " ")

GO TO SUB

READ	ADD.	STORE	ADD.
E_5	23-01	E_0 *	23-12
G_0	" "	E_1 *	" "
G_1	" "	E_5 *	" "
D_0	" "	G_0	" "
D_1	" "	G_1	" "
D_2	" "	D_0	" "
D_3	" "	D_1	" "
D_4	" "	D_2	" "
D_5	" "	D_3	" "
D_6	" "	D_4	" "
D_7	" "	D_5	" "
D_8	" "	D_6	" "
D_9	" "	D_7	" "

SUB-RETURN

READ	ADD	STORE	ADD
E_0	23-14	E_5 *	23-12
D_5	" "	E_1 *	" "
D_9	" "	E_0 *	" "
D_8	" "	D_5 *	" "
D_7	" "	D_9	" "
D_6	" "	D_8	" "
D_5	" "	D_7	" "
D_4	" "	D_6	" "
D_3	" "	D_5	" "
D_2	" "	D_4	" "
D_1	" "	D_3	" "
D_0	" "	D_2	" "
G_1	" "	D_1	" "
G_0	" "	D_0	" "
E_5	" "	G_1 *	" "
E_1	" "	G_0 *	23-12
		P_W *	23-03
E_0	" "	E_5 *	23-12
		P_W *	23-03
D_5	" "	E_1 *	23-12
		P_W *	23-03
D_9	23-14	P_W	23-03
D_8	23-07	P_C	23-04

NOTE: * = DON'T CARE STORE.

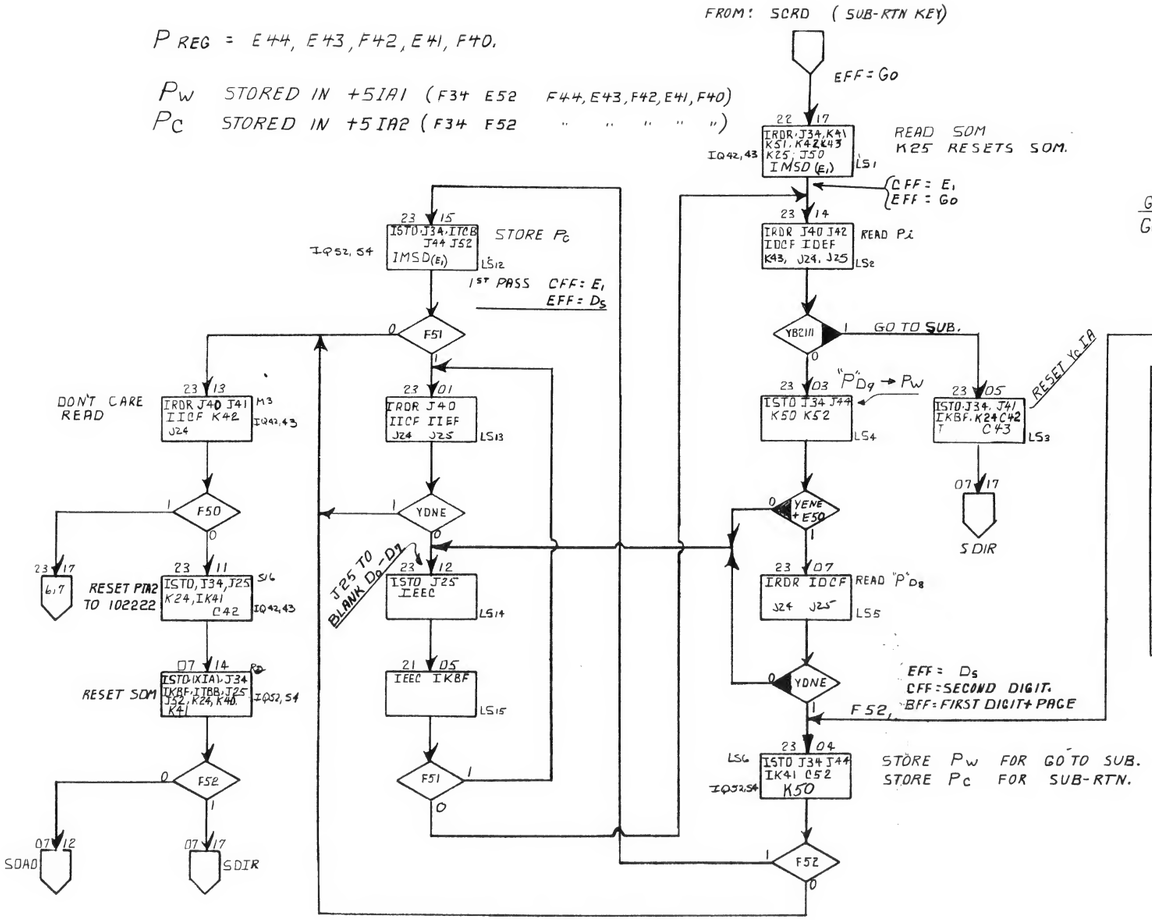

FIRST DIGIT = P_W = D_9

SECOND DIGIT = P_C = D_8

ENG. RESP. — DIV.						
UNLESS OTHERWISE NOTED — TOLERANCES — 0.XX ±0.02 0.XXX ±0.005 ANGULAR ± MACHINED SURFACES 63 — DO NOT SCALE —	ITEM	QTY	DESCRIPTION	PART NO.	DWG. NO.	MAT'L SPEC.
	DRAWN Bill Thayer	DATE 7-7-69	TITLE SUBROUTINE SUB/RETURN 9100B		NEWLETT PACKARD LABORATORY INSTRUMENTS	
	ENGINEER				NEXT ASSY. 9100B	
	APPROVED R Spangler				D-09100-90370-7	
	SUPERSEDES		FINISH	SCALE		

SYM	REVISIONS	APPROVED	DATE

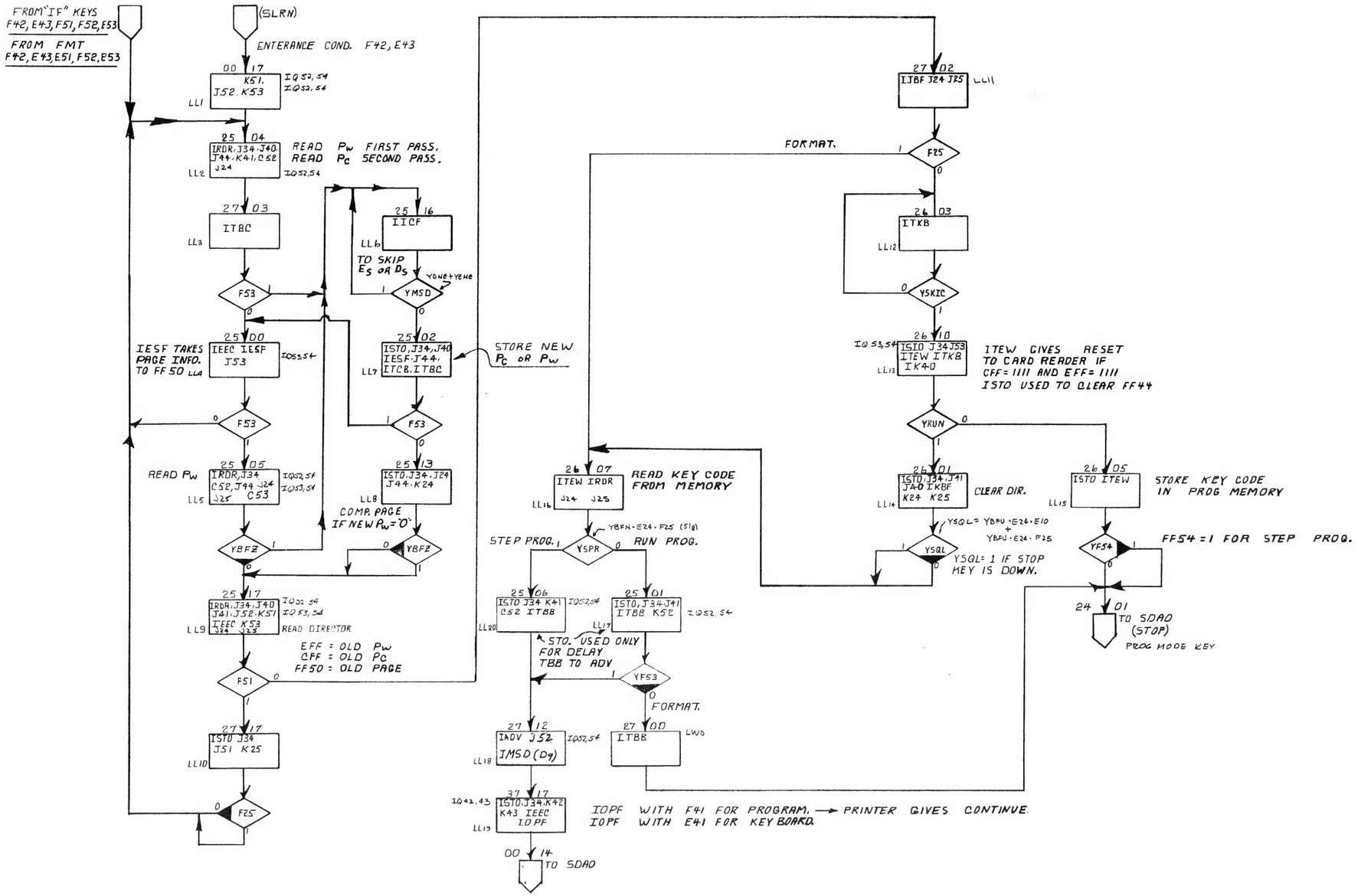

ENG. RESP. — DIV.						
UNLESS OTHERWISE NOTED — TOLERANCES — 0.XX ±0.02 0.XXX ±0.005 ANGULAR ± — MACHINED SURFACES 63 — DO NOT SCALE —	ITEM	QTY	DESCRIPTION	PART NO.	DWG. NO.	MAT'L SPEC.
	DRAWN AL HOWARD	DATE 7-7-69	TITLE SUBROUTINE - LEARN		HEWLETT PACKARD LABORATORY INSTRUMENTS	
	ENGINEER R Spangle APPROVED		9100B		NEXT ASSY. 9100B	
	SUPERSEDES		FINISH	SCALE	D-09100-90370-8	

SYM	REVISIONS	APPROVED	DATE

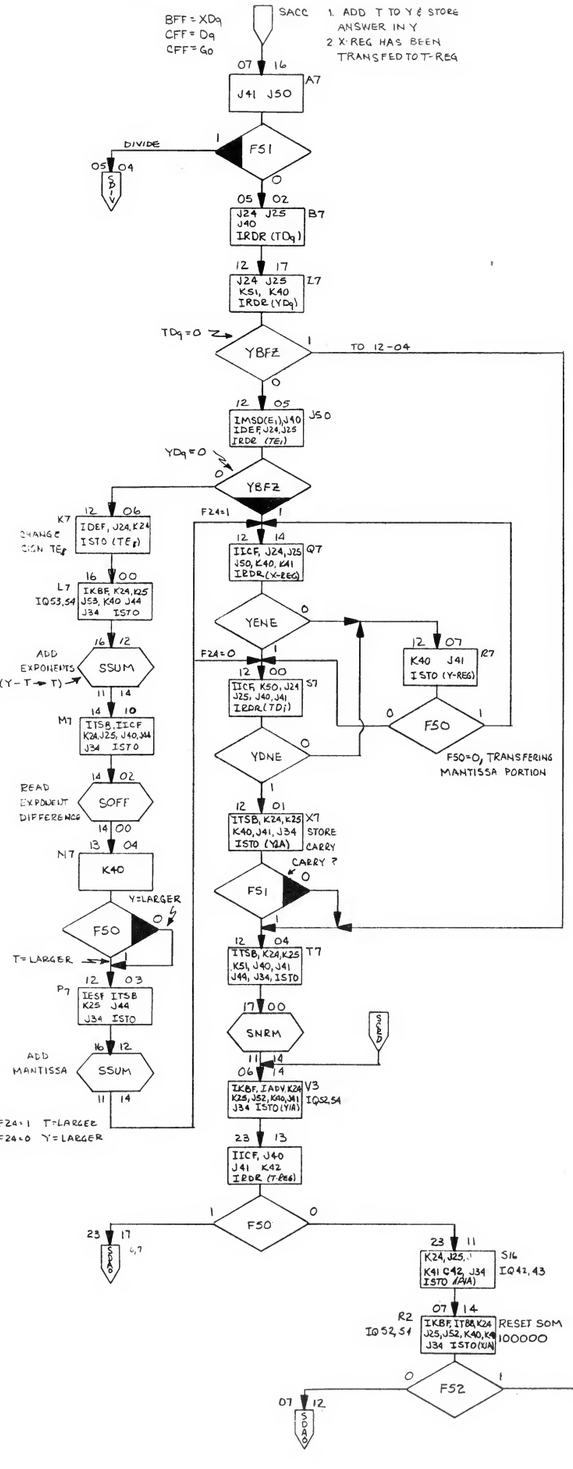

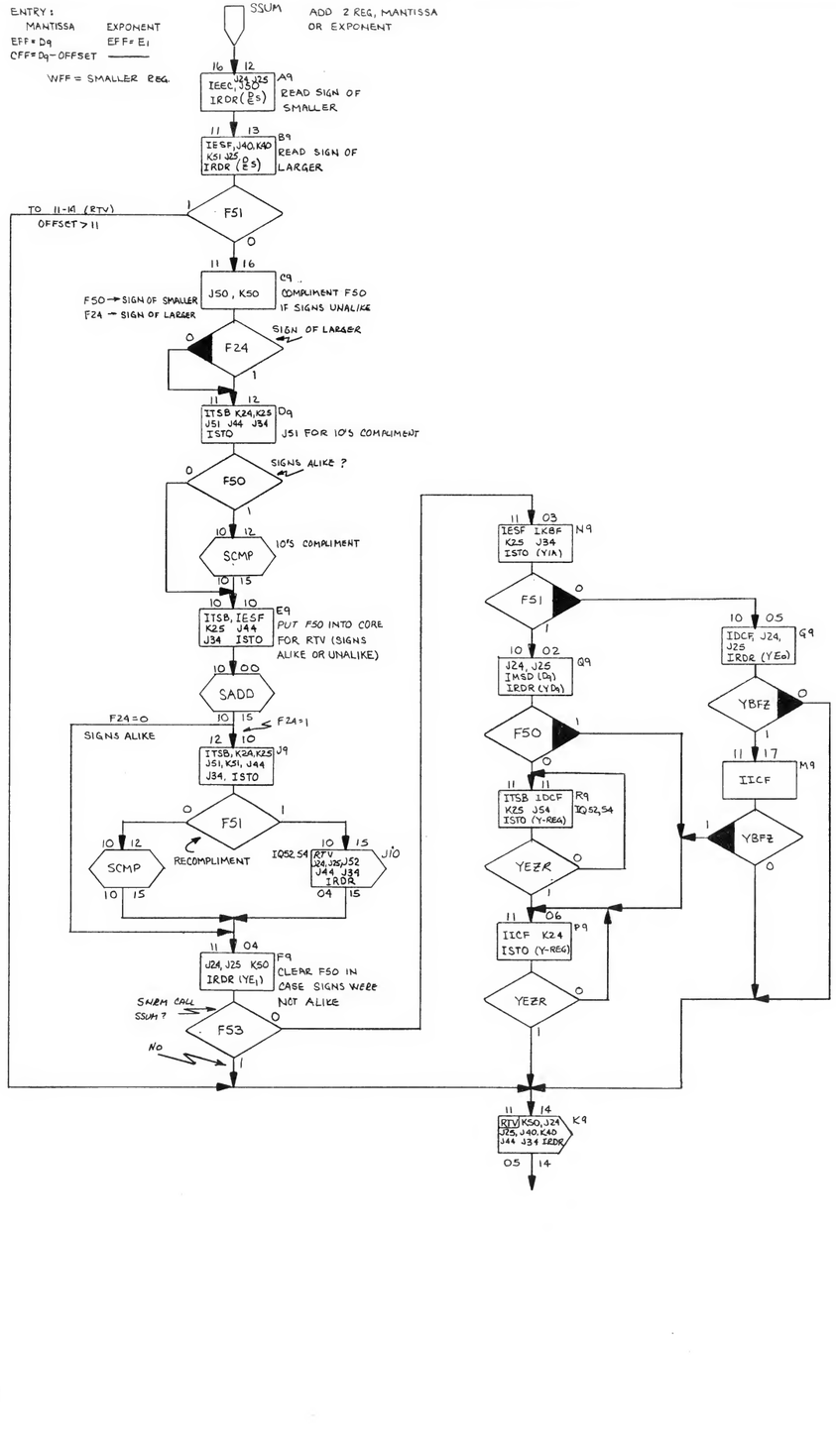

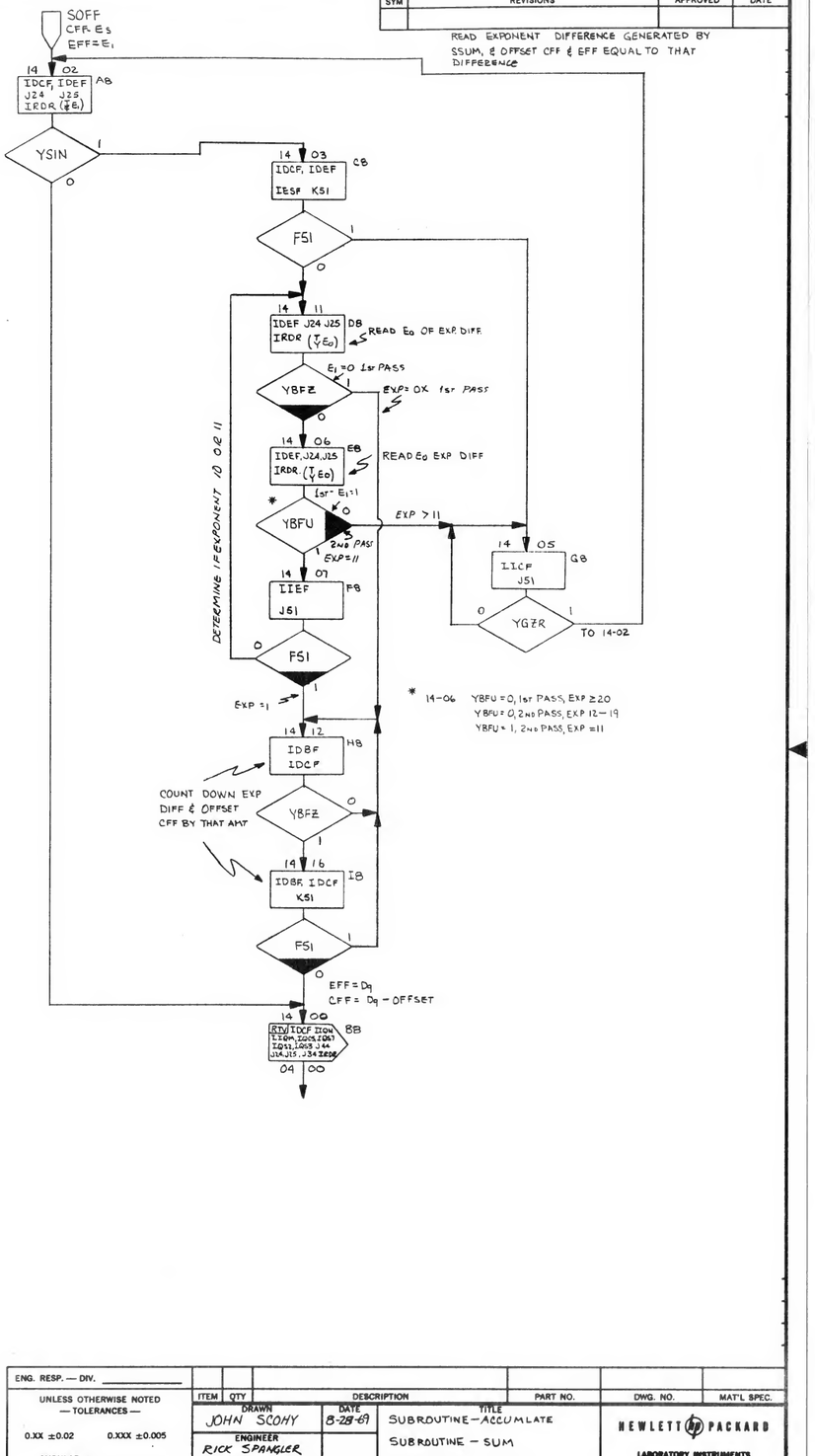

READ EXPONENT DIFFERENCE GENERATED BY SSUM, & OFFSET CFF & EFF EQUAL TO THAT DIFFERENCE

ENG. RESP. — DIV.	ITEM	QTY	DESCRIPTION	PART NO.	DWG. NO.	MAT'L SPEC.
UNLESS OTHERWISE NOTED — TOLERANCES — 0.XX ±0.02 0.XXX ±0.005 ANGULAR ± MACHINED SURFACES 63 — DO NOT SCALE —						

DRAWN	DATE	TITLE		
JOHN SCOHY	8-28-69	SUBROUTINE-ACCUMLATE SUBROUTINE - SUM SUBROUTINE - OFFSET		
ENGINEER RICK SPANGLER				
APPROVED				
SUPERSEDES		FINISH	SCALE	

HEWLETT PACKARD
LABORATORY INSTRUMENTS

NEXT ASSY. 9100B

D-09100-90370-9

SYM	REVISIONS	APPROVED	DATE

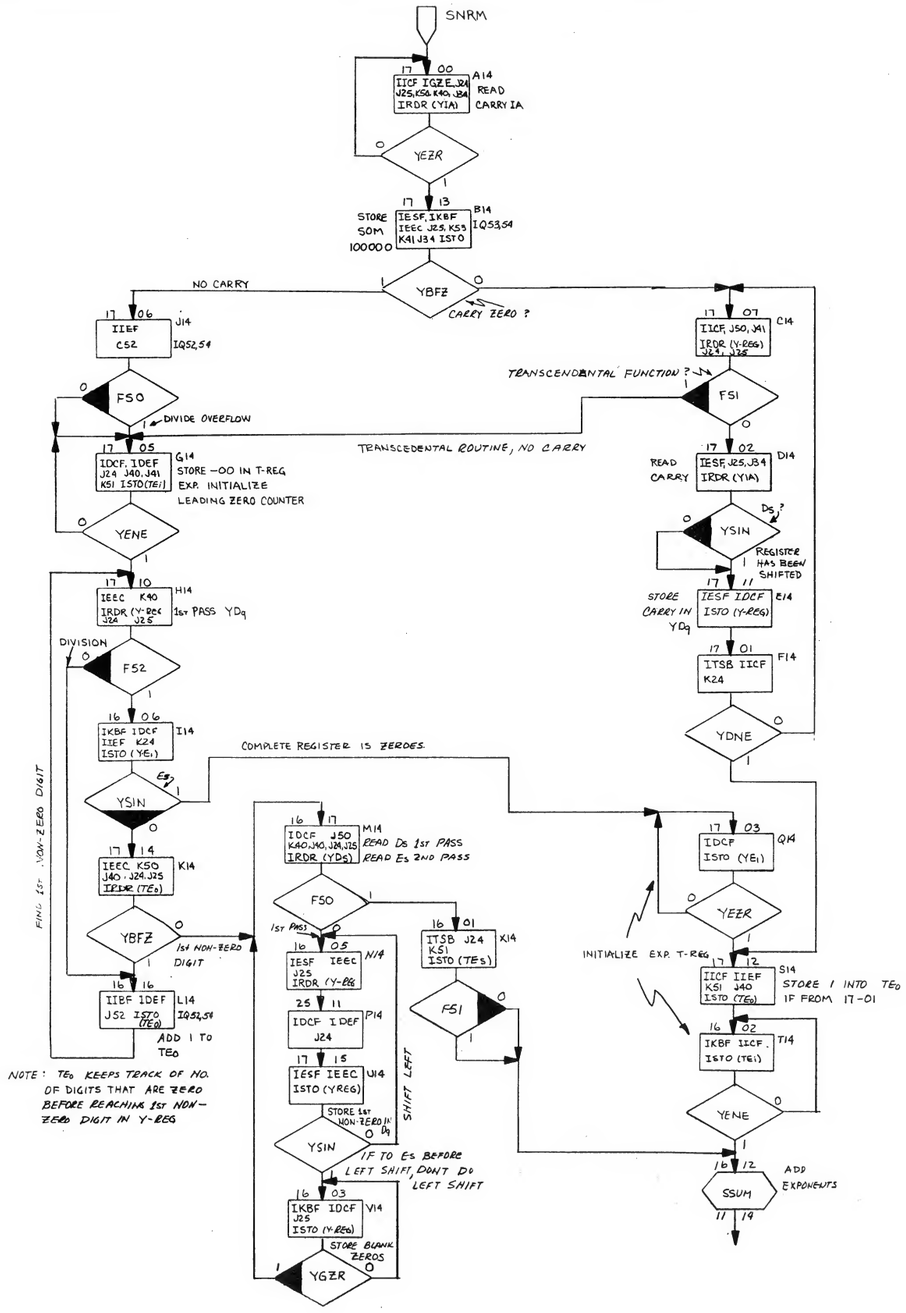

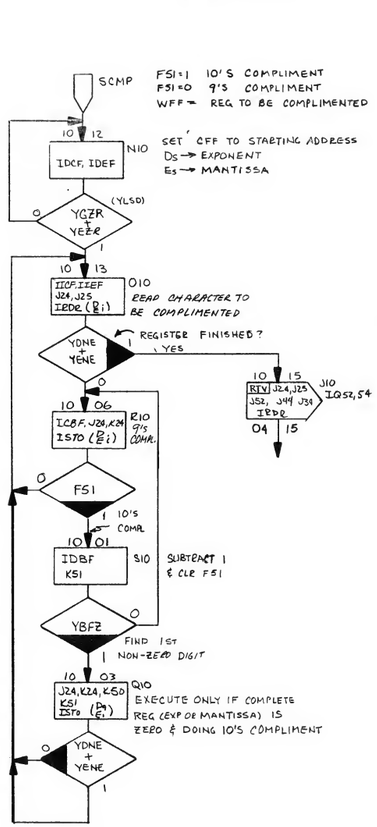

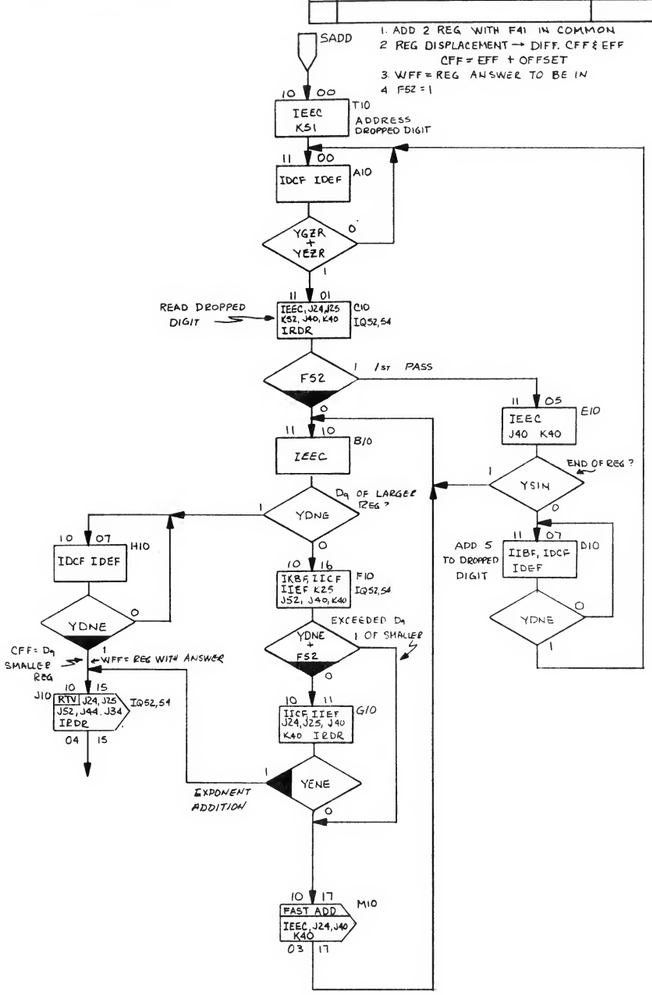

ENG. RESP. — DIV.						
UNLESS OTHERWISE NOTED — TOLERANCES —	ITEM	QTY	DESCRIPTION	PART NO.	DWG. NO.	MAT'L SPEC.
0.XX ±0.02 0.XXX ±0.005	DRAWN JOHN SCOHY	DATE 8-28-69	TITLE SUBROUTINE-NORMALIZE	HEWLETT PACKARD		
ANGULAR ±	ENGINEER RICK SPANGLER		SUBROUTINE-COMPLIMENT	LABORATORY INSTRUMENTS		
MACHINED SURFACES 63	APPROVED		SUBROUTINE- ADD	NEXT ASSY. 9100B		
— DO NOT SCALE —	SUPERSEDES		FINISH SCALE	D - 09100 - 90370 - 10		

SYM	REVISIONS	APPROVED	DATE

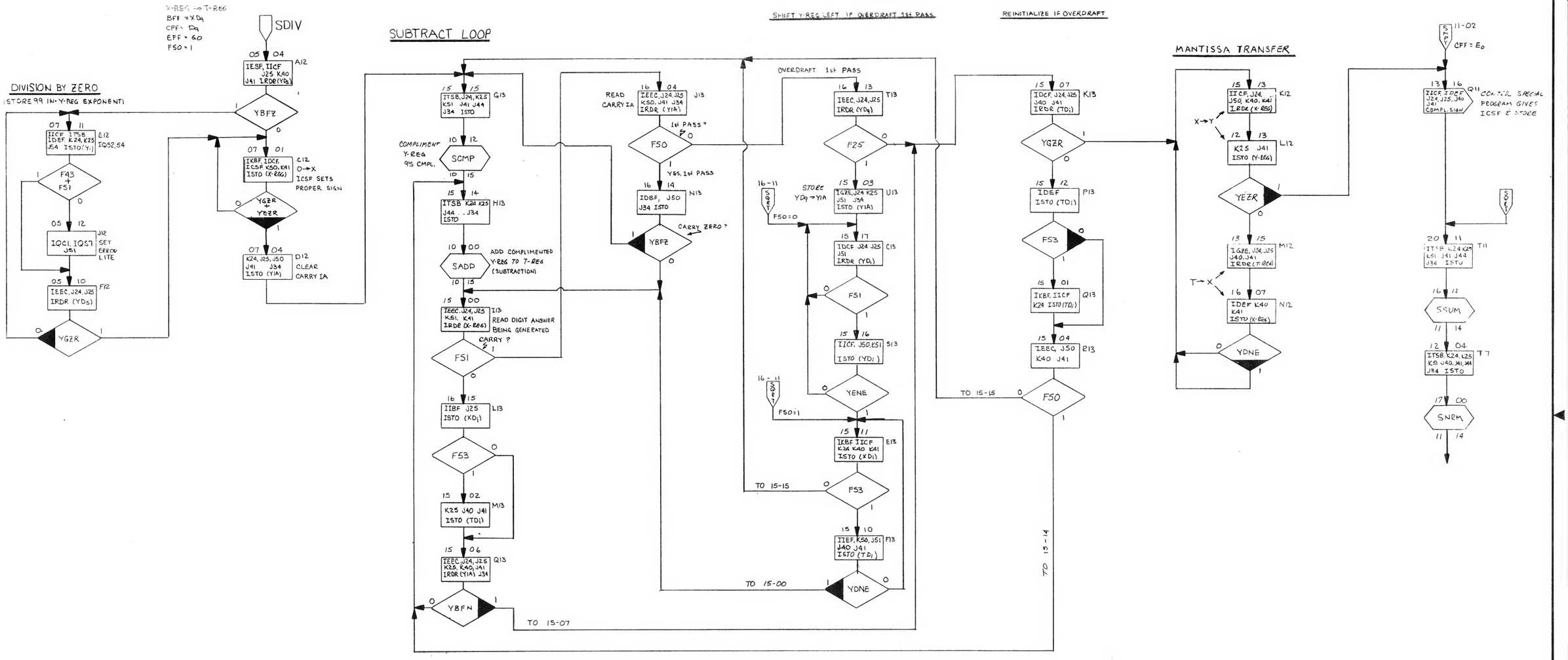

SDIV:

1 SUCCESSIVELY SUBTRACT T-REG FROM Y-REG ENTERING THE NUMBER OF TIMES THE SUBTRACTION IS ACCOMPLISHED WITHOUT OVERFLOW INTO X-REG.

ENG. RESP. — DIV.						
UNLESS OTHERWISE NOTED — TOLERANCES — 0.XX ±0.02 0.XXX ±0.005 ANGULAR ± MACHINED SURFACES 63 — DO NOT SCALE —	ITEM	QTY	DESCRIPTION	PART NO.	DWG. NO.	MAT'L SPEC.
DRAWN JOHN SCOHY	DATE 9-3-69	TITLE SUBROUTINE – DIVIDE		NEWLETT PACKARD LABORATORY INSTRUMENTS		
ENGINEER RICK SPANGLER						
APPROVED				NEXT ASSY. 9100B		
SUPERSEDES		FINISH	SCALE	D-09100-90370-11		

SYM	REVISIONS	APPROVED	DATE

TRANSFER KEYCODE BACK INTO BFF

ENTRY EFF:D9

27 16 ITCB IEEC — A15

0 YF50 1

PROGRAM KEYS — 26 11

26 02 RDR(YIA) J34, IADV T43 K40, J41 IT8S K50, IGEE — B15 IQ42,43 — READ ARC-HYPER INFO.

CFF:D9 EFF:GO

00 14 ITBC, K50 ITBU J37 IQ52,54

26 13 ISTO(XIA) J34, K42, K53, K25, IKBF, IESF, J41, K40 — CLEAR ARITH CARRY

1 YF25 0

27 13 FUNCTION ENTRY

TO RECT. — 22 06 — E15 — ISTO(ZIA) J34, K24, K25, J40, K41, ITSB

STORE TRANSFER VECTOR — 34 01 — D17 — ISTO(YIA) J34, J41, K52, IEEC — IQ52,54

30 06 ROM X≷Y ABC — 30 03 — 21 00 (STAN)

COS. — 22 13 — F15 — ISTO(ZIA) J34, J40, K41, IEEC, ITSB, ITB5

YF24 — 21 00 (STAN) — 21 07 (SEXP)

21 04 — ISTO(ZIAI) J34, K24, K25, J40, K41, C52, IJBF, IEEC — K15 — IQ52,54

YF25 — 21 12 (SNLG) — 21 13 (SARC)

ARC — 22 12 — I15 — ISTO (XIA) J34, J24, K25 — 07 14 — 6

HYPER — 22 07 — Q15 — ISTO(YIA) J34, J25, ITSB

STO SOM FOR X<0 — 17 04 — C1 — ISTO(XIA) J34, K24, ITSB, K41

07 17 (SDIR)

SIN — 22 10 — H15 — ISTO(ZIA2) J34, J40, K41, IEEC, ITCB, IT8S

YF24 — 21 00 (STAN) — 21 07 (SEXP) — HYPER SIN

21 02 — ISTO (ZIA) J34, K24, J25, J40, K41, K52, K54, IEEC, IJBF — L15 — IQ52,54 IQ53,54

YF25 — 21 17 (SNLG) — 21 13 (SARC)

TAN — 22 11 — J15 — ISTO(ZIA2) J34, J40, K41, IKBF, IEEC, IT8S

YF24 — 21 07 (SEXP) — 21 00 (STAN)

21 06 — ISTO (ZIA) J34, K24, J25, J40, K41, C52, K54, IJBF, IEEC — M15 — IQ52,54 IQ53,54

YF25 — 21 11 (SNLG) — 21 14 (SARC)

LN X — 22 05 — Q15 — ISTO(ZIA) J34, K24 IJBF, J40 K41

LOG X — 22 15 — R15 — ISTO(ZIA) J34, IT5B K24, J40 K41

13 14 SNLG

INT X — 22 04 — T15 — J25 K24 K41, IICF, IDEF

STORE TRANS. VECTOR. — 14 15 — X15 — ISTO J34, IJBF J44 K43, IICF C42 — IQ42,43

YENE — 14 02 — 5 OFF — 14 00

27 10 ITBC IDEF — Y15

F50 — 1 X< UNITY — 0

27 01 — ISTO (X REG) K24, J25, IDCF, IKBF — Z15

YGZR — 0 — F51 — 0

27 14 — TO LAST PART OF CLR. — SDAO

27 13 (TO CLR X) SDAO

e^X — 22 14 — S15 — ISTO(ZIA) J34, K24, J40, K41, J52, IJBF, IEEC — IQ52,54

21 07 SEXP

√X — 22 16 — D15 — IRDR (XD0) K40, K41, IICF, IIBB, J24, J25

20 15 (SQRT)

TO POLAR — 22 02 — C17 — (SUB) SARC

SUB/ RETURN — 22 17 — S1

FROM SDA0

LN10 — 24 11 — STORE TRANS. VECTOR — ISTO, J34, J44, K40, K41, IJBF, K25, J24, IICF — 15 17 CONT. LOGIC CORDIC CONSTANT — 06 14

|Y| — 24 15 — W15 — IRDR (YD0) K40, K50, K24 — 06 14 SADO

RCL — 22 01 — N15 — IQ52,54 — ISTO J34, K24, J25, J40, K52, IJBF, IEEC

RECALL d TO MAKE SURE PACE FLAG IS CLEARED — 32 04 — ROM d e F, X≷Y — 30 17 — 27 14

ACC− — 22 03 — P15 — IQ52,54 — ISTO, J34, J24, J25, J40, K52, IEEC, ITSB

37 03 ROM CHS X≷Y — 35 01

37 04 — B16 — IQ42,43 — ISTO, J34, K24, K25, J41, C43, ITSB, J40

24 04 ROM CHS — 24 01

IQ52,54 — 34 14 — C16 — J24 K25 J34 ITSB

36 00 — Y22 — IQ52,54 — ISTO (TIA) K52 IDBF

31 13 ROM Y≷e f Y→X≷Y — 30 16

ACC+ — 22 00 — O15 — ISTO J34 IJBF, J24, K25 IEEC, J40, K52 — IQ52,54

31 17 ROM — 30 16

37 00 — Y15 — IQ42,43 — J34, K24, J42 ITCB

36 17 — B23 — J25 J50 IJBF

F24 — 0 — 1

36 00 — Y22 — IQ52,54 — ISTO (TIB) K52, IDBF — BFF=111111

33 16 ROM CHS — 30 17 — 27 14

36 15 — C23 — K25, IKBF

F50 — 1 — 0

36 00 — Y22 — IQ52,54 — ISTO, (TIA) K52, IDBF — BFF=000000

30 11 ROM ÷ — 30 17 — 27 14

36 11 — Z22 — ICBF

36 00 — Y22 — IQ52,54 — ISTO (TIA) K52 IDBF — BFF=001001

30 10 ROM — 30 17 — 27 14

YcIA2	INITIALIZATION
000000	NO INITIALIZATION
010000	ARC
100111	HYPER (X<0)
110111	ARC-HYPER

ENG. RESP. — DIV.	ITEM	QTY	DESCRIPTION	PART NO.	DWG. NO.	MAT'L SPEC.
UNLESS OTHERWISE NOTED — TOLERANCES — 0.XX ±0.02, 0.XXX ±0.005, ANGULAR ±, MACHINED SURFACES 63, — DO NOT SCALE —	DRAWN Bill Adam 7-7-69		TITLE CORDIC ENTRY SUBROUTINE 9100B		NEWLETT PACKARD LABORATORY INSTRUMENTS	
	ENGINEER R Spangler				NEXT ASSY. 9100B	
	APPROVED				D-09100-90370-12	
	SUPERSEDES		FINISH	SCALE		

SYM	REVISIONS	APPROVED	DATE

D-09100-90370-13

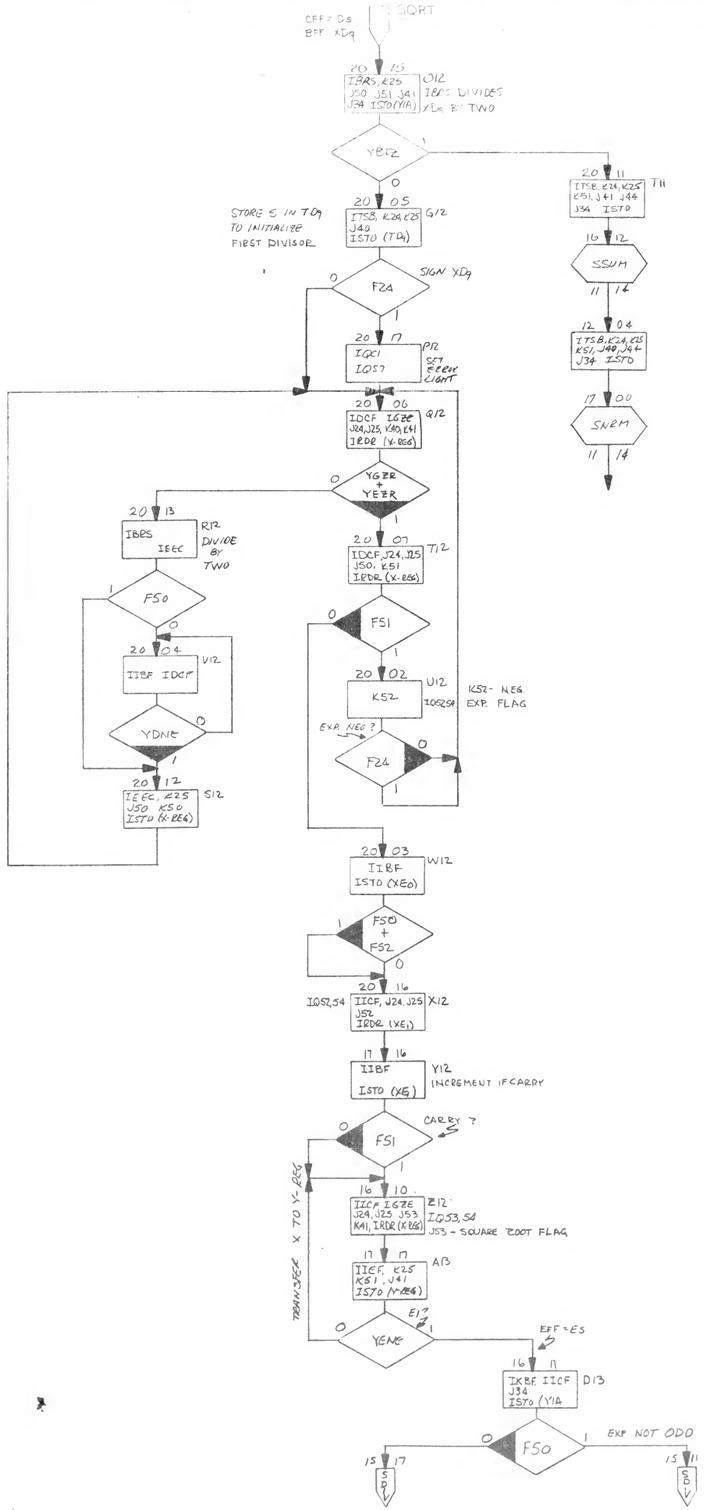

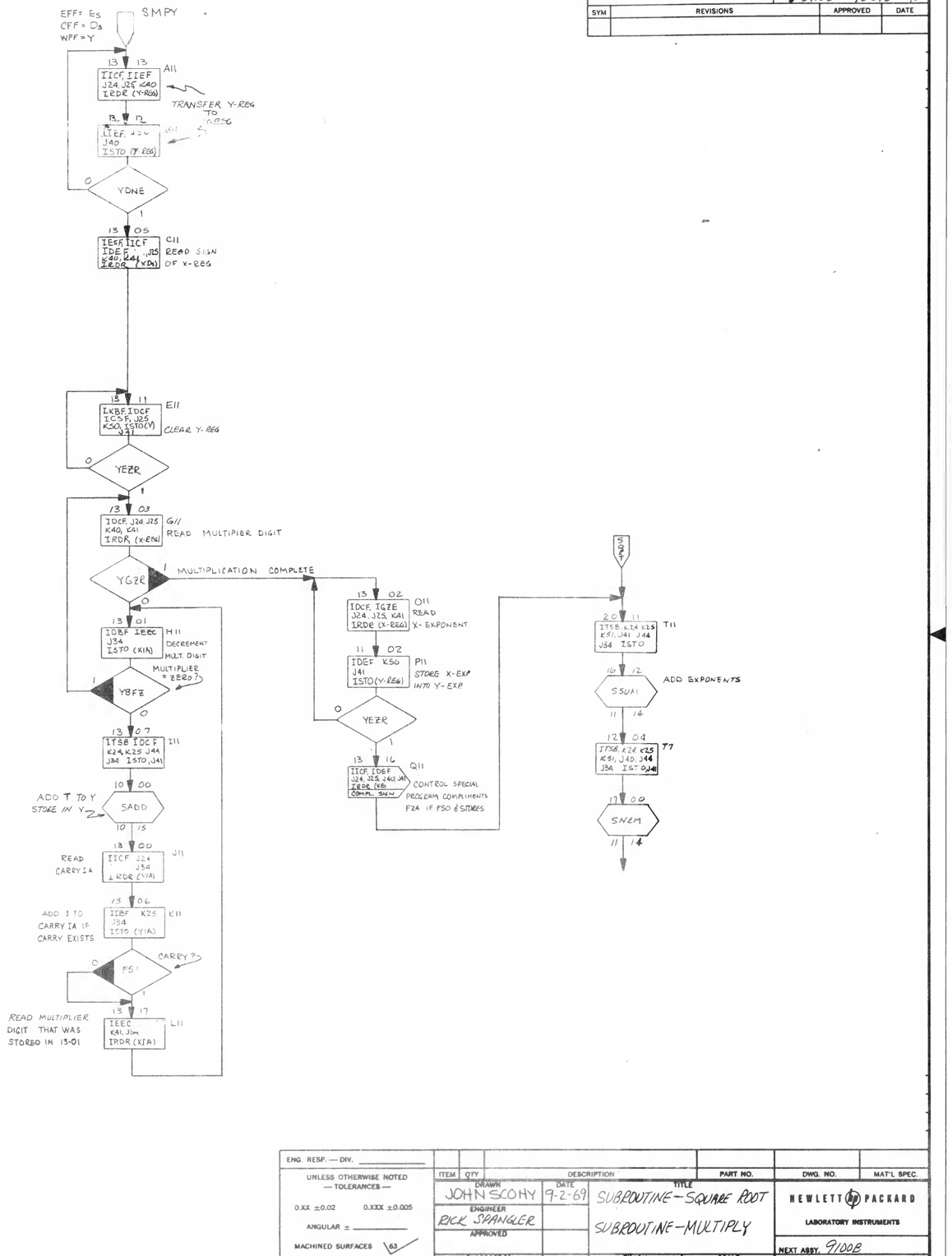

ENG. RESP. — DIV.						
UNLESS OTHERWISE NOTED — TOLERANCES —	ITEM	QTY	DESCRIPTION	PART NO.	DWG. NO.	MAT'L SPEC.
0.XX ±0.02 0.XXX ±0.005	DRAWN JOHN SCOHY	DATE 9-2-69	TITLE SUBROUTINE—SQUARE ROOT		HEWLETT PACKARD	
ANGULAR ±	ENGINEER RICK SPANGLER		SUBROUTINE—MULTIPLY		LABORATORY INSTRUMENTS	
MACHINED SURFACES 63	APPROVED				NEXT ASSY. 9100B	
— DO NOT SCALE —	SUPERSEDES		FINISH	SCALE	D-09100-90370-13	

HP 9280-0004 PRINTED IN U.S.A. 1020-10

SYM	REVISIONS	APPROVED	DATE

FLAGS: Z_cIA1 → QUADRANT INFORMATION
Z_cIA2 → FUNCTION; 0_8 — TAN, 11_8 — SIN, 13_8 — COS, 06_8 — TO RECT, 15_8 — LOGX, 17_8 — LNX, E^X.
Y_cIA2 → PREFIX KEYS; $01\cdots00_8$ — ARC, $10_8\cdots07_8$ — HYPER.

QUADRANT INFORMATION:
1. SIGN OF TAN FOR PROPER QUADRANT IS IN F24.
2. SIGN OF COS FOR PROPER QUADRANT IS IN F21.
3. IF ROTATED BY ODD NO. OF TIMES, FINDING THE COMPLIMENT OF THE ANGLE, INDICATED BY F25.

CFF = 16_8
EFF = 11_8
WFF = 01001
FS2 = 1

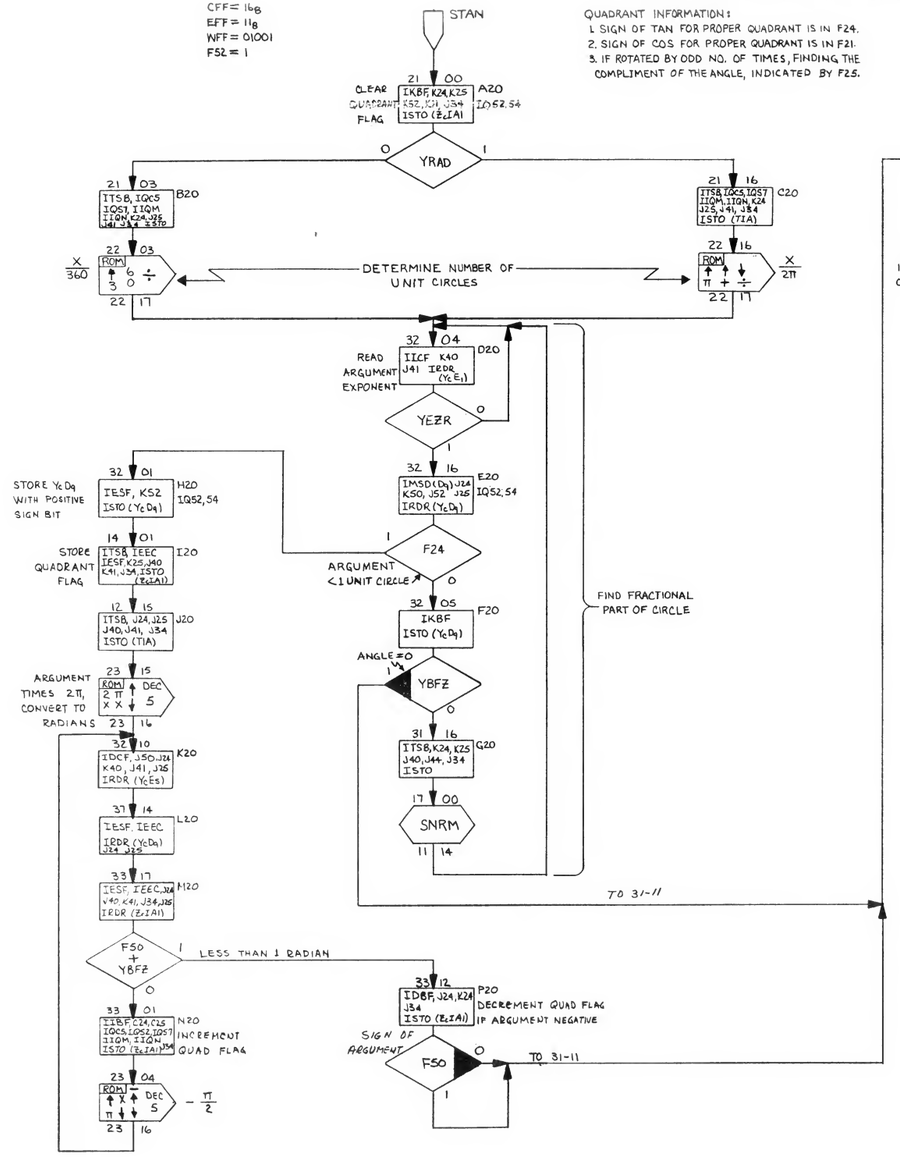

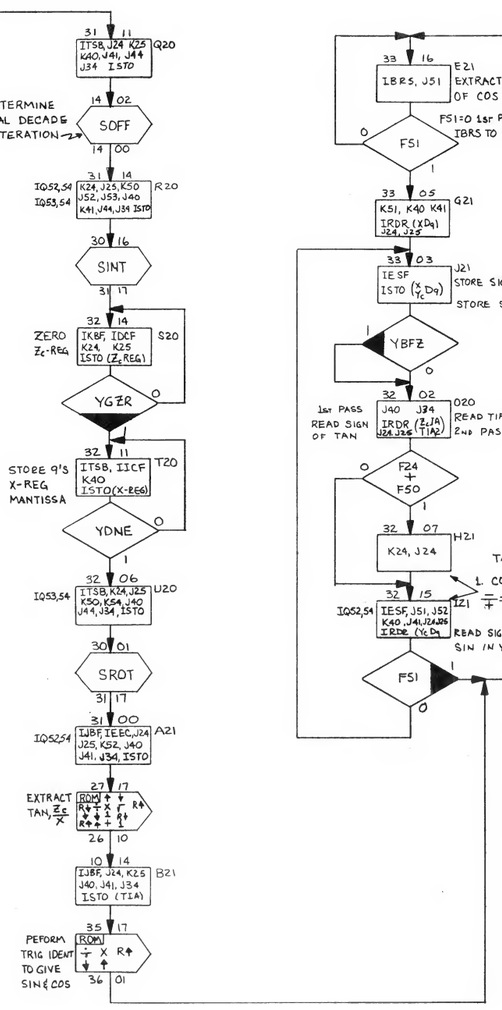

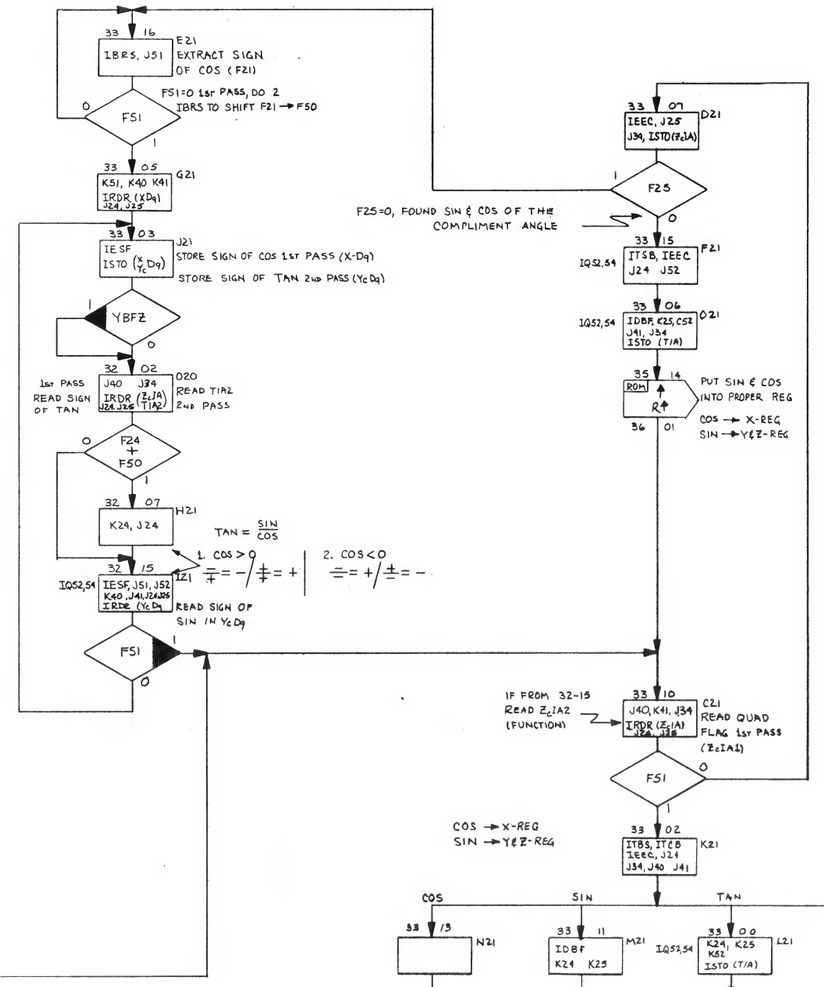

ENG. RESP. — DIV.						
UNLESS OTHERWISE NOTED — TOLERANCES — 0.XX ±0.02 0.XXX ±0.005 ANGULAR ± MACHINED SURFACES 63 — DO NOT SCALE —	ITEM	QTY	DESCRIPTION	PART NO.	DWG. NO.	MAT'L SPEC.
DRAWN JOHN SCOHY DATE 8-28-69 ENGINEER RICK SPANGLER APPROVED SUPERSEDES	TITLE FLOW CHART - TANGENT ROUTINE FINISH SCALE				NEWLETT PACKARD LABORATORY INSTRUMENTS NEXT ASSY. 9100B	D-09100-90370-14

D-09100-90370-15

SYM	REVISIONS	APPROVED	DATE

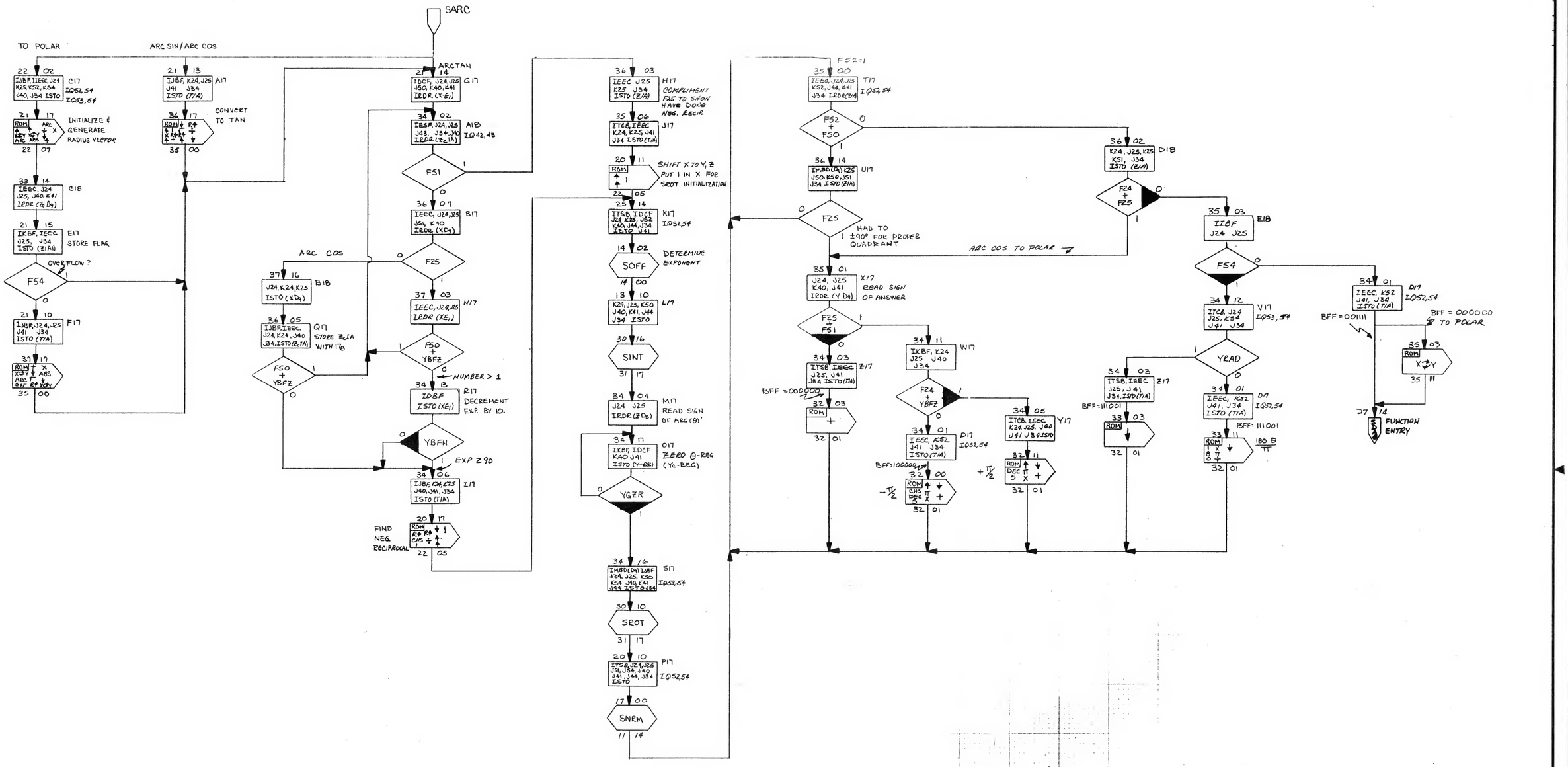

ENG. RESP. — DIV.	ITEM	QTY	DESCRIPTION	PART NO.	DWG. NO.	MAT'L SPEC.

UNLESS OTHERWISE NOTED — TOLERANCES —
0.XX ±0.02 0.XXX ±0.005
ANGULAR ±
MACHINED SURFACES 63
— DO NOT SCALE —

DRAWN	DATE	TITLE
JOHN SCOHY	8-29-69	SUBROUTINE — ARC TANGENT
ENGINEER: RICK SPANGLER		
APPROVED		
SUPERSEDES		FINISH / SCALE

HEWLETT PACKARD
LABORATORY INSTRUMENTS

NEXT ASSY. 9100B

D-09100-90370-15

SYM	REVISIONS	APPROVED	DATE

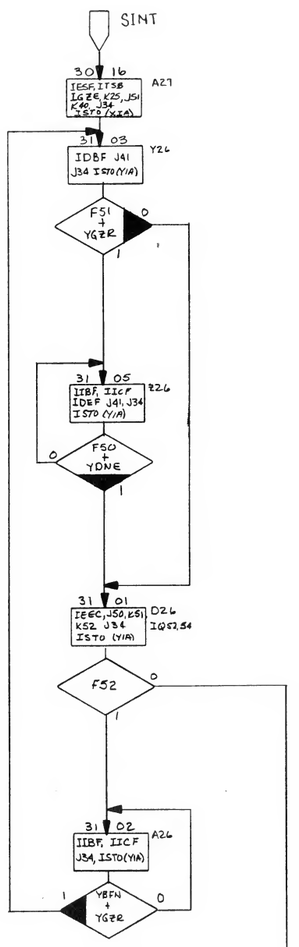

SINT

EXP OFFSET CFF ON ENTRY	XIA2	YIA1	YIA2
D_9	16	12	15
D_8	16	16	16
D_7	16	06	17
D_6	16	02	00
D_5	16	04	01
D_4	16	06	02
D_3	16	10	03
D_2	16	11	04
D_1	16	11	05
D_0	16	11	06
G_1	16	11	07
G_0	16	11	10
E_5	16	11	11

SROT
LN, TAN^{-1} ENTRY
FS0=1

FS2=1 SROT
EXP, TAN ENTRY

TAN CALLS SROT
$Y_c = \theta_0$ = ARGUMENT (RADIANS)
X = 93 = 1 UNIT VECTOR
Z_c = 0
T = DOUT CARD (ROM CONSTANT

A = DOUT CARD (Y-VECTOR)

FS3=0 TAN^{-1} OR EXP
FS3=1 TAN OR LOG
FS4=0 TAN OR TAN^{-1}
FS4=1 LOG OR EXP

Y_{R_i} +1 = Y_{R_i} + $10^{-i} X_{R_i}$
X_{R_i} +1 = X_{R_i} + $10^{-i} Y_{R_i}$
θ_i +1 = θ_i - θ_{C_i} +1

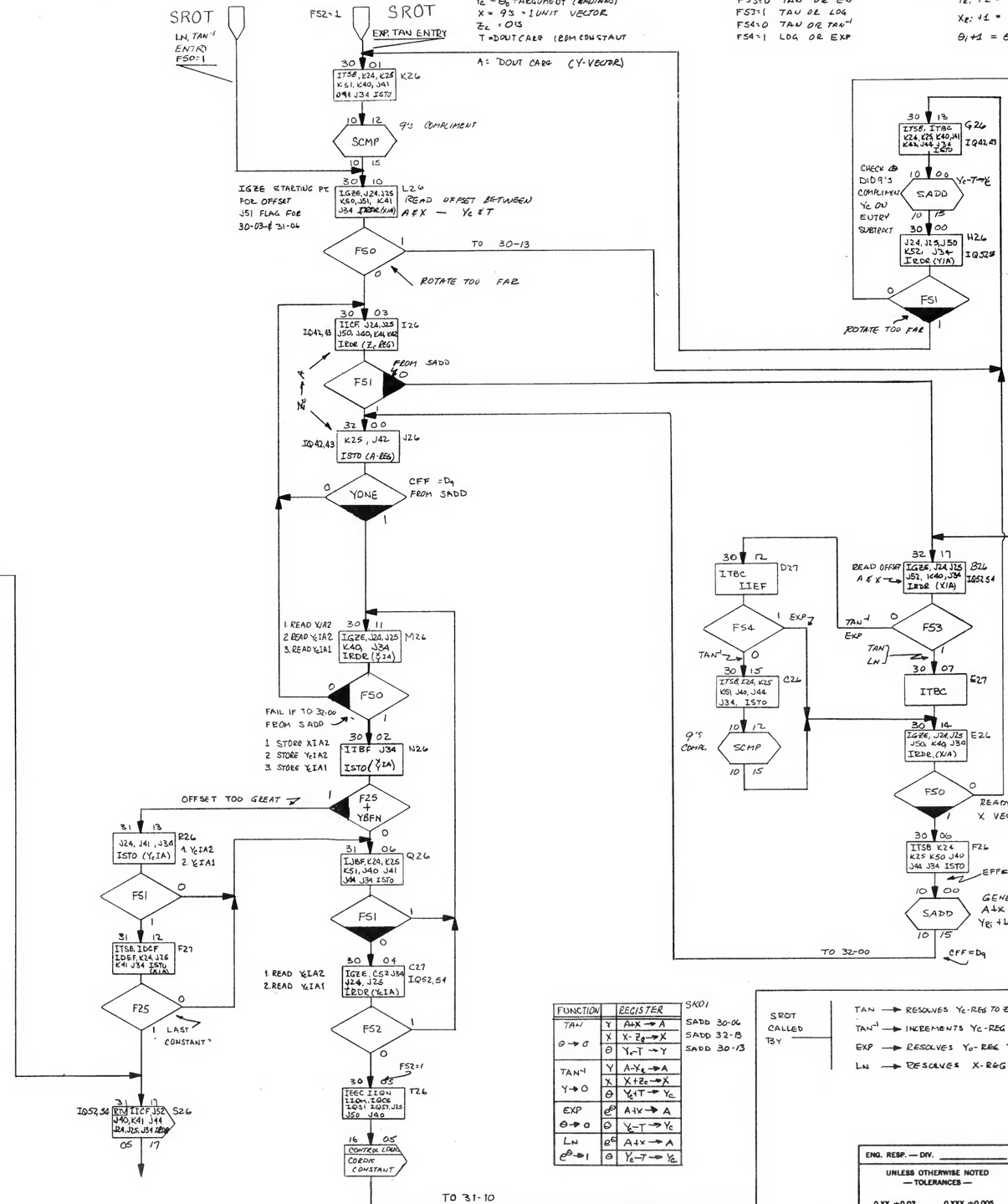

FUNCTION		REGISTER	
TAN	Y	A+X → A	SADD 30-06
$\theta \to 0$	X	X-Z_0 → X	SADD 32-B
	θ	Y_c-T → Y	SADD 30-13
TAN^{-1}	Y	A-X_{Z_c} → A	
$Y \to 0$	X	X+Z_{Z_c} → X	
	θ	Y_c+T → Y_c	
EXP	e^{θ}	A+X → A	
$\theta \to 0$	θ	X-T → Y_c	
LN	e^{θ}	A+X → A	
$e^{\theta} \to 1$	θ	Y_c-T → Y_c	

SROT CALLED BY

TAN → RESOLVES Y_c-REG TO ZERO, INCREMENTS Z_c-REG FROM ZERO, DECREMENTS X-REG FROM ALL 9'S (1).
TAN^{-1} → INCREMENTS Y_c-REG FROM ZERO, RESOLVES Z_c TO ZERO, INCREMENTS X-REG FROM ONE (1).
EXP → RESOLVES Y_0-REG TO ZERO, INCREMENTS X-REG UP FROM ONE (1).
LN → RESOLVES X-REG UP TO ONE (1) INCREASING Y_c-REG.

ENG. RESP. — DIV.

UNLESS OTHERWISE NOTED — TOLERANCES —
0.XX ±0.02 0.XXX ±0.005
ANGULAR ±
MACHINED SURFACES 63
— DO NOT SCALE —

ITEM	QTY	DESCRIPTION	PART NO.	DWG. NO.	MAT'L SPEC.

	DATE
DRAWN: JOHN SCOHY	9-2-69
ENGINEER: RICK SPANGLER	9-2-69
APPROVED	
SUPERSEDES	

TITLE: SUBROUTINE- ROTATE
SUBROUTINE INITIALIZE

FINISH | SCALE

HEWLETT PACKARD
LABORATORY INSTRUMENTS

NEXT ASSY. 9100B

D-09100-90370-16

SYM	REVISIONS	APPROVED	DATE

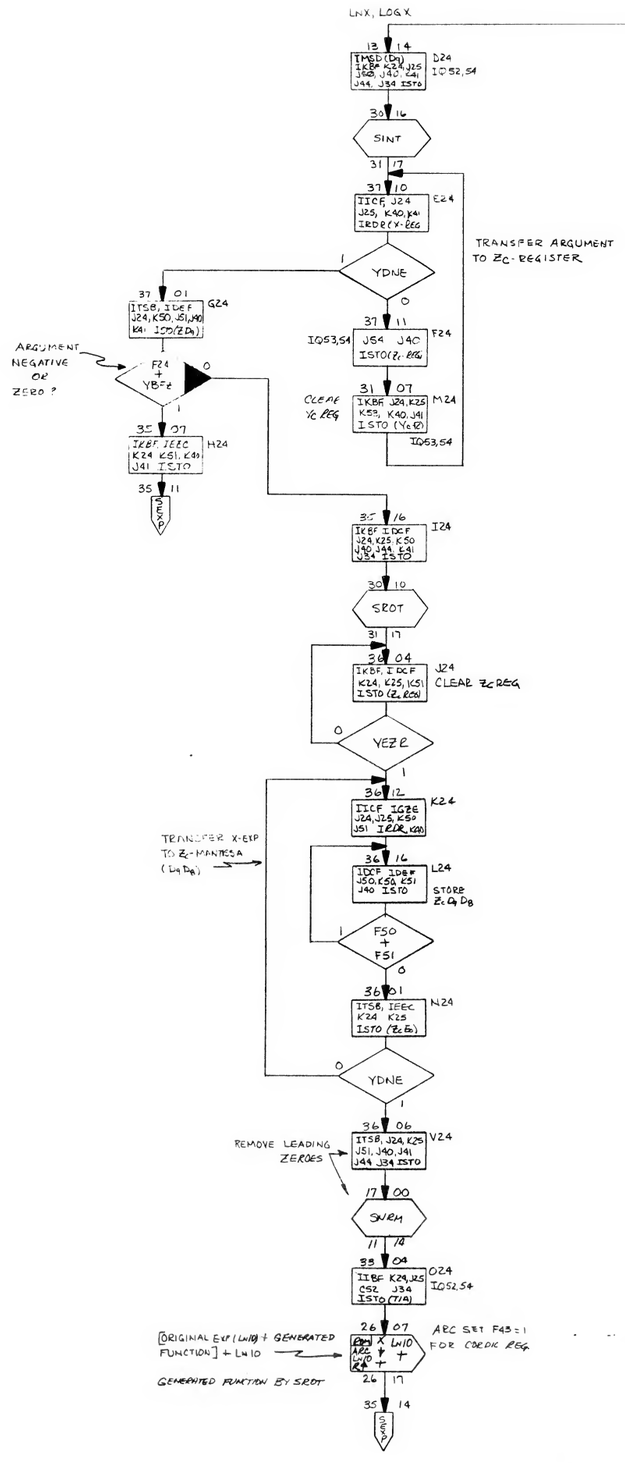

ENG. RESP. — DIV.	ITEM	QTY	DESCRIPTION	PART NO.	DWG. NO.	MAT'L SPEC.
UNLESS OTHERWISE NOTED — TOLERANCES — 0.XX ±0.02 0.XXX ±0.005 ANGULAR ± MACHINED SURFACES 63 — DO NOT SCALE —						

DRAWN	DATE	TITLE	
JOHN SCOHY	8-29-69	SUBROUTINE NATURAL LOG	HEWLETT PACKARD LABORATORY INSTRUMENTS
ENGINEER RICK SPANGLER			
APPROVED			NEXT ASSY. 9100B
SUPERSEDES		FINISH / SCALE	D-09100-90370-17

D-09100-90370-18

SYM	REVISIONS	APPROVED	DATE

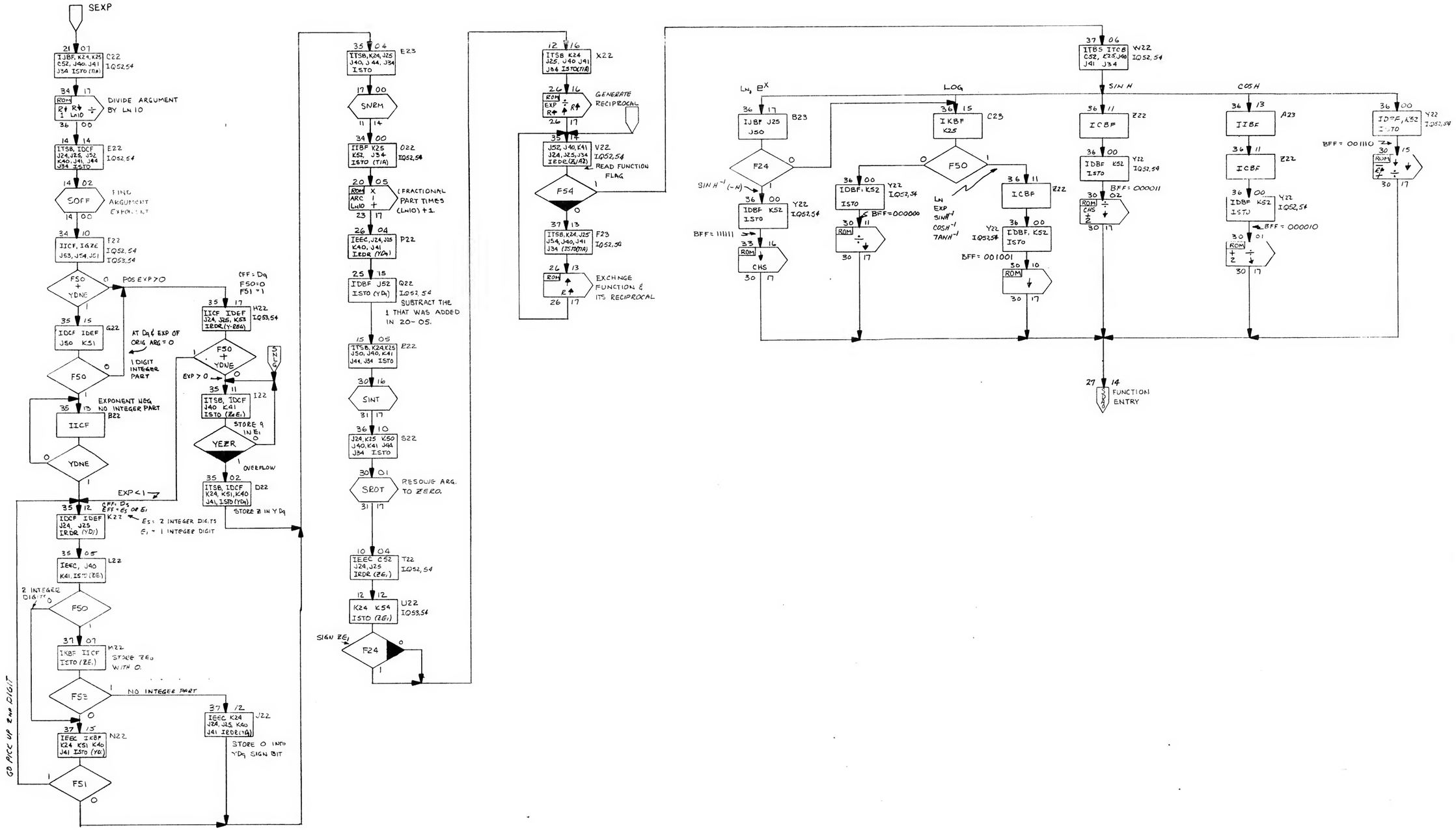

ENG. RESP. — DIV.	ITEM	QTY	DESCRIPTION	PART NO.	DWG. NO.	MAT'L SPEC.
UNLESS OTHERWISE NOTED — TOLERANCES — 0.XX ±0.02 0.XXX ±0.005 ANGULAR ± MACHINED SURFACES 63 — DO NOT SCALE —			DRAWN JOHN SCOHY DATE 8-29-69 ENGINEER RICK SPANGLER APPROVED SUPERSEDES		TITLE SUBROUTINE EXPONENTIAL FINISH SCALE	NEWLETT PACKARD LABORATORY INSTRUMENTS NEXT ASSY. 91008 D-09100-90370-18

9100B

B-09100-90370-19

SYM	REVISIONS	APPROVED	DATE

SECONDARY ADDRESS →

PRIMARY ADDRESS ↓

	00	01	02	03	04	05	06	07	10	11	12	13	14	15	16	17	
20	RTN 2317	+	1	X	LN10	ARC	RTN 2205	1	↑	↑	↓	÷	R↑	1	CHS	R↓	I17 J17 O22
21	RTN 2206	X	↑	↑	RTN 2207	X	↑	↓	÷	ARC	ABS	x⇄y	↑	ARC	x⇄y	↑	C17 O24 O22
22	0	6	3	↑		2514	3510	3314	RTN 2217	÷	↓	+	↑	π	↑	3204	C20 B20
23	—	↓	X	π	↑	RTN 2316	5	DEC	↓	↑	X	π	X	2	3210	2604	I20 O20
24	3714	3414	RTN 2401	CHS	↑	LN	√‾	↓	÷	↓	—	R↑	+	1	↑	↑	C24 B16
25	1314	RTN 2500	↓	+	ABS	R↑	√‾	↓	+	1	3510	RTN 2512	CHS	X	↑	↑	A24 Y24 X24
26	+	LN10	+	↓	X	R↑	LN10	ARC	1014	RTN 2617	R↑	↑	÷	R↑	EXP	3514	X22 F23 O24
27	RTN 2610	R↑	1	R↓	√‾	↓	+	1	X	↑	↑	↓	÷	R↑	↓	R↓	A21
30	2	+	CHS	2100	RTN 3003	ARC	x⇄y	RTN 3017	↓	÷	↓	+	R↑	—	3700	2714	Y22 M21 A23 C23 L21 Z22 B23
31	RTN 3016	x⇄y	↓	f	y→()	+	f	⊟	y⇄()	+	⊟	y⇄()	↑	ARC	x⇄y	↑	O15 Y22
32	CHS	3500	RTN 3201	+	↓	X	π	↑	5	DEC	2600	RTN 3017	f	x⇄y	⊟	d	N15 Y17
33	RTN 3017	x⇄y	RTN 3201	↓	÷	π	X	O	8	1	RTN 3212	—	RTN 3017	CHS	↓	↑	B24 Z17 D17
34		RCL	SET FLAG	↑	x⇄y	f	STO	⊟	STO	CLR X	RTN 3600	÷	LN10	R↓	1	R↓	C22 O21
35	2114	3704	RTN 3511	x⇄y	↓	X	ARC	X	x⇄y	2714	RTN 3601	R↑	↑	X	↓	÷	B21 O21
36	1414	3310	RTN 3500	↓	÷	R↑	↑	R↑	√‾	↓	—	R↑	1	↑	X	↑	A17
37	3501	x⇄y	CHS	↑	RTN 3500	x⇄y	↓	ABS	X	R↑	√‾	↓	+	EXP	ARC	x⇄y	F17 P15

ENG. RESP. — DIV. _____

UNLESS OTHERWISE NOTED
— TOLERANCES —
0.XX ±0.02 0.XXX ±0.005
ANGULAR ± _____
MACHINED SURFACES 63
— DO NOT SCALE —

ITEM	QTY	DESCRIPTION	PART NO.	DWG. NO.	MAT'L SPEC.

DRAWN: AL HOWARD — DATE: 5/29/9
ENGINEER: R Spangler
APPROVED:
SUPERSEDES:

TITLE: ROM PROGRAM STEPS 9100B

FINISH: _____ SCALE: _____

HEWLETT hp PACKARD
LABORATORY INSTRUMENTS

NEXT ASSY. 9100B

B-09100-90370-19

9100B

B-09100-90370-20			
SYM	REVISIONS	APPROVED	DATE

SECONDARY ADDRESS →

PRIMARY ADDRESS ↓	00	01	02	03	04	05	06	07	10	11	12	13	14	15	16	17
00	0	1	2	3	4	5	6	7	8	9	—	a	b		c	d
01	0	1	2	3	4	5	6	7	8	9	—	a	b	DEC	c	d
02	3	1	4	1	5	9	2	6	5	3	6	0	0(2)	0(2)	π	RIGHT HALF BLANK
03	←				FAST	ADD				→						LEFT HALF BLANK
04	L7 14-10	K-26 30-10		P7 17-00	T7 06-14	R-22 36-10	F26 32-00	I11 13-00	E9 J9 11-04	T11 13-04	D9 10-10	G26 30-00	H13 15-00	C26 30-14	G20 32-04	Q26 U26 31-10
05	I24 36-04			P7 12-14		S22 10-04	V24 33-04		E9 12-10	Q20 31-14		X26 31-04	K17 13-10	G13 15-14		U5 06-14
06	D24 37-10				E23 34-00	E23 35-04	U20 31-00		M7 13-04	R20 32-14			L17 34-04		Y1 07-14	X15 27-10
07	00-14	14-00		M10 11-10					F18 35-00				E22 34-10			S17 20-10
10	9()	6(2)	9()	6(3) D'3	6(2) D4	8 D7	6(3)	9()	6(2)	8	6	5	2	4	9	1(2)
11	9() D'7	5	0(3) D'9	0(3)	9()	9()	7	8	5	3	9	8	1	6	3(2)	9(2) G'0
12	9()	9()	9()	9()	6	9	3	1	4	7	1	8	0	5	6	0 G'0
13	9() D9	5 D'9	0(2) D'8	3(2)	3	0(3)	9	5 D'2	3	1	0	1	7	9	8	0(3) G'0
14	9() D8	9()	9()	9()	5	0	0(3)	0(3)	9()	5	0	3(2)	0	8	5	5(3)
15	9()	2	3	0	2	5	8	5	0	9	2 D5	9	9	0(2) D2	0(2)	LN 10
16	D0	D1	D2	D3	D4	D5	D6	D7	D8	D9	9() D6	9()	6(2)	6(3) D1	G0	G1
17	D0'	D1'	D'2	D'3	D'4	D'5	D'6	D'7	D'8	D9'	9()	9()	6(3)	6(3)	G'0	G'0

CHARACTER DECODE
RIGHT HALF
LEFT HALF

π

LN 10

ENG. RESP. — DIV. _____

UNLESS OTHERWISE NOTED — TOLERANCES —

0.XX ±0.02 0.XXX ±0.005

ANGULAR ± _____

MACHINED SURFACES 63

— DO NOT SCALE —

ITEM	QTY	DESCRIPTION	PART NO.	DWG. NO.	MAT'L SPEC.

DRAWN	DATE	TITLE	
AL HOWARD	5/28/9	ROM CONSTANTS TRANSFER VECTORS 9100B	
ENGINEER R Spangler			
APPROVED			
SUPERSEDES		FINISH	SCALE

HEWLETT hp PACKARD

LABORATORY INSTRUMENTS

NEXT ASSY. 9100B

B-09100-90370-20

SYM	REVISIONS	APPROVED	DATE

SECONDARY ADDRESS →

PRIMARY ADDRESS ↓

	00	01	02	03	04	05	06	07	10	11	12	13	14	15	16	17	
00	3	2, 3	2	3	2	3	2	2	3	2, 3	3	3	4, 6, 12	2	3	8	00
01	2	2	2	2	2	2	2	2	2, 3	2	2	2	2	2	2	2	01
02	2	3	2	2	2	3	2	2	2	2	2	2	2	2	2, 4, 6	2	02
03	2	2, 3	3	3	3	3	2	3	3	3	2, 3	2. 3	3	2. 3	2, 3	3	03
04	4	4	4	4, 5	4	4	4	4	5	4	4	4	4	4	4	4, 5	04
05	4	4	9	4	11	4	5	4	11	4	11	5,	5	6	4	5	05
06	5	5	4, 5	5	5	5	5	5	7	5	5	4, 5	4, 5, 9	5	5	5	06
07	4	11	5	4, 5	11	4, 5	4. 5	4.5	5	11	4	5	4, 5, 6 7. 9	4	9	3	07
10	10	10	9	10	18	9, 10	10	10	9	10	10	10	14	9, 10	10	10	10
11	10	10	13	9	9	10	9	10	10	9	9	9	9	5	9	9	11
12	9	9	4	9	9.11, 13	9	9	9	9	4	18	11	9	14	18	9	12
13	13	13	13	13	9	13	13	13	15	13	13	13	17	11	11, 13	13	13
14	9	14	9	9	6	9	9	9	9	9	9	6	18	12	9	6	14
15	11	11	11	11	11	18	11	11	11	11	11	11	11	11	11	6, 11, 12	15
16	9	10	10	10	11	10, 16	10	11	13	13	9	11	11	11	10	10	16
17	10	10	10	10	4, 12	10	10	10	10	10	10	10	10	10	13	13	17
20	5	7	13	13	13	13, 18	13	13	15	11, 13, 15	13	13	7	13	13	13, 15	20
21	14	4	12	14. 17	12	7	12	18	15	17	17	15	15	15	14	15, 17	21
22	12	12	15	12, 14	12	12	12	4, 12	12	12	12	12	12	12	12, 14	7	22
23	2	7	2	3, 17	7, 14	7	7	7	2	4, 5, 7, 9	7	4, 5, 7, 9	7	7, 14	7	4, 5	23
24	4, 6	6	6	6	6, 12	6	6	6	6	6, 12	6	6	6	6. 12	4, 6	6, 17	24
25	8	8	8	4	8	8	8	6	4	10	6	8	15	18	8	8, 17	25
26	6	8	12	8	18	8	6	8, 17	8	6	6	4, 6 18, 12	6	6	6, 18	6	26
27	6, 8	12	8	8	4	6	6	5	12	6	8	4	4	6	6	8, 14	27
30	14, 16	16, 18	16, 18	16	16	16	12, 16	16	12, 14 16. 18	12, 14 16. 18	16	16	16	16, 18	16	16	30
31	14	16	16	16	16	16	16	17	16	14	16	12, 16	14	16	14	12, 16	31
32	14, 15, 16	14	14	15, 16	12, 14	14	14	14	14	14. 15	16	16	14	14	14	16	32
33	14	14	14	14, 15	17	14	4, 14	14	14, 18	14, 15	14	6, 13	15	12, 14	12, 14	14	33
34	17, 18	12, 15	15	15	15, 17	15	15	17	18	4, 14	15	15	12	17	15, 17	15, 18	34
35	15	15	18	15	18	18	15	17	14, 17	18	18	18	14, 18	18	17	14, 18	35
36	12, 18	17	15	15	17	15	17	15	18	12, 18	17	18	15	18	17	12, 15, 18	36
37	12	17	17	12, 15	12	17	18	18	17	17	18	18	14	18	15	8, 15	37
	00	01	02	03	04	05	D6	07	10	11	12	13	14	15	16	17	

D-09100-90370-1 CONTROL LOGIC
- -2 DISPLAY
- -3 SDXT, SDIR, SPMD
- -4 FUNCTION ENTRY
- -5 DIGIT ENTRY
- -6 PROG. MODE KEY
- -7 SUB/RETURN
- -8 SLRN
- -9 SACC, SSUM, SOFF
- -10 SNRM, SCMP, SADD
- -11 SDIV
- -12 CORDIC ENTRY
- -13 SQRT, SMPY
- -14 STAN
- -15 SARC
- -16 SROT, SINT
- -17 SNLG
- -18 SEXP

B-09100-90370-19. ROM PROG STEPS
B-09100-90370-20 ROM CONSTANTS

ENG. RESP. — DIV. _____
UNLESS OTHERWISE NOTED — TOLERANCES — 0.XX ±0.02 0.XXX ±0.005 ANGULAR ± _____ MACHINED SURFACES 63 — DO NOT SCALE —

ITEM	QTY	DESCRIPTION	PART NO.	DWG. NO.	MAT'L SPEC.

DRAWN JOHN SCOHY DATE 9-3-69
ENGINEER RICK SPANGLER
APPROVED
SUPERSEDES

TITLE INDEX— 9100B FLOW CHARTS

HEWLETT PACKARD LABORATORY INSTRUMENTS

NEXT ASSY. 9100B

FINISH SCALE

D-09100-90370-21